ORDER NO. MKE0112200C1

B15 (U.S.A.), B4 (PUERTO RICO)

Service Manual

Compact VHS Camcorder

PV-L452 / PV-L652

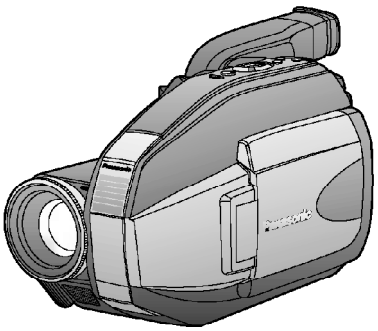

Models: PV-L452/ PV-L652

SPECIFICATIONS

ITEM	SPECIFICATION	1	2
Power Source	Compact VHS Camcorder: DC6 V AC Adaptor: 110/120/220/240 V AC, 50/60 Hz Battery: Nickel-Cadmium Type DC 6 V	○	○
Power Consumption	Compact VHS Camcorder: 6 V DC 8.5 W (Max. 11.5 W) AC Adaptor: 19 W 1.2 W (when not in use.)	○	○
Video Signal	EIA Standard (525 lines, 60 fields) NTSC color signal	○	○
Video Recording System	Head: 2 rotary heads plus flying erase head. Helical scanning system Signal-to-Noise Ratio: SP: more than 43 dB SLP: more than 41 dB Horizontal Resolution (Color/Monochrome) Recording: more than 300 lines Playback: more than 230 lines	○	○
Audio	Head: Normal Mono: 1 stationary head MIC Input Level (M3 type) - 70 dB Frequency Response: Normal Mono: SP: 100 Hz - 8 kHz SLP: 100 Hz - 5 kHz Signal-to-Noise Ratio: Normal Mono: SP: more than 42 dB SLP: more than 40 dB	○	○
Tape Speed	SP: 1-5/16 i.p.s (33.35 mm/s), SLP: 7/16 i.p.s (11.12 mm/s) Record/Playback Time: SP: Max. 30 min. SLP: Max. 90 min, with TC-30 Tape FF Time: Less than 7 min. (TC-30 Tape) REW Time: Less than 4 min. (TC-30 Tape)	○	○
Tape Format	Tape width 0.5 inch (12.7 mm) high density tape	○	○
Pick-Up System	Sequential color difference field reverse system	○	○
Pick-Up Device	One integral color filter Charge Coupled Device (CCD)	○	○

ITEM	SPECIFICATION	1	2
Lens	20 : 1 zoom lens, F1: 1.7 with auto iris control Focal length: 3.8 mm - 76.0 mm 4 speed power zoom function Lens filter diameter: 45 mm	○	○
Viewfinder	10.2 mm (0.4 inch) Electronic Viewfinder	○	–
	14 mm (0.55 inch) Liquid Crystal Color Electronic Viewfinder	–	○
LCD Monitor	63.5 mm (2.5 inch) Liquid Crystal Display	○	–
	76.2 mm (3.0 inch) Liquid Crystal Display	–	○
Memory	8 MB SD Memory Card	○	○
Image Size	FINE: 640 x 480 pixels Normal: 320 x 240 pixels	○	○
Image Storage	FINE: Approx. 60 images Normal: Approx. 210 images	○	○
Image Format	JPEG	○	○
Minimum Illumination Required	0.8 lx (F1: 1.6) 0.08 footcandles 7 lx (F1: 1.6) 0.7 footcandles (EIA Standard)	○	○
Operating Condition	0 °C~40 °C (32 °F~104 °F) (Temperature) 10 %~75 % (Humidity)	○	○
Weight	Compact VHS Camcorder: 1.00 kg (2.20 lbs.)	○	–
	0.98 kg (2.16 lbs.)	–	○
	AC Adaptor: 0.3 kg (0.66lbs.)	○	○
Dimension	Compact VHS Camcorder: 106 mm x 125 mm x 190.5 mm (W x H x D) (4-3/16 inch x 4-15/16 inch x 7-1/2 inch) (W x H x D)	○	–
	109.5 mm x 122.5 mm x 190.5 mm (W x H x D) (4-5/16 inch x 4-13/16 inch x 7-1/2 inch) (W x H x D)	–	○
	AC Adaptor: 68 mm x 41 mm x 140 mm (W x H x D) (2-11/16 inch x 1-5/8 inch x 5-1/2 inch) (W x H x D)	○	○

1. PV-L452
2. PV-L652

Weight and dimensions shown are approximate.
Designs and specifications are subject to change without notice.

© 2001 Matsushita Kotobuki Electronics Industries LTD. All rights reserved. Unauthorized copying and distribution is a violation of law.

⚠ WARNING

This service information is designed for experienced repair technicians only and is not designed for use by the general public. It does not contain warnings or cautions to advise non-technical individuals of potential dangers in attempting to service a product. Products powered by electricity should be serviced or repaired only by experienced professional technicians. Any attempt to service or repair the product or products dealt with in this service information by anyone else could result in serious injury or death.

Panasonic®

1. SAFETY PRECAUTIONS

GENERAL GUIDELINES

1. **IMPORTANT SAFETY NOTICE**
   There are special components used in this equipment which are important for safety. These parts are marked by ⚠ in the Schematic Diagrams, Circuit Board Layout, Exploded Views and Replacement Parts List. It is essential that these critical parts should be replaced with manufacturer's specified parts to prevent X-RADIATION, shock, fire, or other hazards. Do not modify the original design without permission of manufacturer.
2. **An Isolation Transformer should always be used during the servicing of AC Adaptor whose chassis is not isolated from the AC power line. Use a transformer of adequate power rating as this protects the technician from accidents resulting in personal injury from electrical shocks. It will also protect AC Adaptor from being damaged by accidental shorting that may occur during servicing.**
3. **When servicing, observe the original lead dress. If a short circuit is found, replace all parts which have been overheated or damaged by the short circuit.**
4. **After servicing, see to it that all the protective devices such as insulation barriers, insulation papers shields are properly installed.**
5. **After servicing, make the following leakage current checks to prevent the customer from being exposed to shock hazards.**

LEAKAGE CURRENT COLD CHECK

1. **Unplug the AC cord and connect a jumper between the two prongs on the plug.**
2. **Measure the resistance value, with an ohmmeter, between the jumpered AC plug and each exposed metallic cabinet part on the equipment such as screwheads, connectors, control shafts, etc.**

When the exposed metallic part has a return path to the chassis, the reading should be between 1 M Ω and 5.2 M Ω . When the exposed metal does not have a return path to the chassis, the reading must be infinity.

LEAKAGE CURRENT HOT CHECK
(See Figure 1.)

1. Plug the AC cord directly into the AC outlet. Do not use an isolation transformer for this check.
2. Connect a 1.5 k Ω , 10 W resistor, in parallel with a 0.15 μ F capacitor, between each exposed metallic part on the set and a good earth ground, as shown in Figure 1.
3. Use an AC voltmeter, with 1 k Ω /V or more sensitivity, to measure the potential across the resistor.
4. Check each exposed metallic part, and measure the voltage at each point.
5. Reverse the AC plug in the AC outlet and repeat each of the above measurements.
6. The potential at any point should not exceed 0.75 V RMS. A leakage current tester (Simpson Model 229 or equivalent) may be used to make the hot checks, leakage current must not exceed 1/2 mA. In case a measurement is outside of the limits specified, there is a possibility of a shock hazard, and the equipment should be repaired and rechecked before it is returned to the customer.

Figure. 1

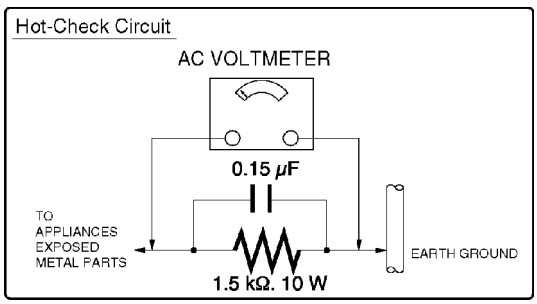

2. PREVENTION OF ELECTRO STATIC DISCHARGE (ESD) TO ELECTROSTATICALLY SENSITIVE (ES) DEVICES

Some semiconductor (solid state) devices can be damaged easily by static electricity. Such

components commonly are called Electrostatically Sensitive (ES) Devices. Examples of typical ES devices are integrated circuits and some field-effect transistors and semiconductor "chip" components. The following techniques should be used to help reduce the incidence of component damage caused by electro static discharge (ESD).

1. **Immediately before handling any semiconductor component or semiconductor-equipped assembly, drain off any ESD on your body by touching a known earth ground. Alternatively, obtain and wear a commercially available discharging ESD wrist strap, which should be removed for potential shock reasons prior to applying power to the unit under test.**
2. **After removing an electrical assembly equipped with ES devices, place the assembly on a conductive surface such as aluminum foil, to prevent electrostatic charge buildup or exposure of the assembly.**
3. **Use only a grounded-tip soldering iron to solder or unsolder ES devices.**
4. **Use only an antistatic solder removal device. Some solder removal devices not classified as "antistatic (ESD protected)" can generate electrical charge sufficient to damage ES devices.**
5. **Do not use freon-propelled chemicals. These can generate electrical charges sufficient to damage ES devices.**
6. **Do not remove a replacement ES device from its protective package until immediately before you are ready to install it. (Most replacement ES devices are packaged with leads electrically shorted together by conductive foam, aluminum foil or comparable conductive material).**
7. **Immediately before removing the protective material from the leads of a replacement ES device, touch the protective material to the chassis or circuit assembly into which the device will be installed.**

   CAUTION :

   Be sure no power is applied to the chassis or circuit, and observe all other safety precautions.
8. **Minimize bodily motions when handling unpackaged replacement ES devices. (Otherwise harmless motion such as the brushing**

together of your clothes fabric or the lifting of your foot from a carpeted floor can generate static electricity (ESD) sufficient to damage an ES device).

3. OPERATION GUIDE

4. SERVICE NOTES (PLEASE READ)

4.1. SERVICE NOTES

4.1.1. EXTENSION CABLES FOR SERVICE

Using the following Extension Cables, place the unit as shown for check and service.

No.	PART NUMBER	PART NAME	CONNECTION
①	VUVS0007	12Pin Extension Cable	FP8 on Main C.B.A. ~ CCD F.P.C. on Lens Unit
②	VUVS0012	22Pin Extension Cable	FP9 on Main C.B.A. ~ Lens F.P.C. on Lens Unit
③	VUVS0015	28Pin Extension Cable	FP1 on Main C.B.A. ~ A/C Head/Capstan F.P.C. on VCR Mechanism Chassis Ass'y

NOTE:

1. When using the cassette tape:
   A. Be sure to remove a cassette lid cover of cassette tape.
   B. Be sure to install the Lock Screw to Cassette Up Unit. After servicing, be sure to remove the Lock Screw.
   Refer to "HOW TO HOLD THE CASSETTE UP UNIT IN THE DOWN POSITION WITHOUT CASSETTE COVER INSTALLED."
   C. Select the H. SAFETY DEFEAT in SERVICE MODE. Refer to " SERVICE MODE SPECIFICATION (SELF-DIAGNOSTIC SYSTEM) . "
   Or, connect a silicon diode on component side of the Main C.B.A. as shown to defeat safety function.
   (Since Takeup Reel sensor, located on Main C.B.A. does not work when opening Main C.B.A., the mechanism does not work (Reel lock). Therefore, make sure to defeat Safety function.)
2. Use extreme care so as not to apply any excessive pressure to the Cylinder/Head Amp F.P.C. After servicing, be sure to place it correctly. Refer to "Cylinder Unit" in "MECHANISM SECTION."
3. The LCD open/close SW. is for changing between LCD Display or EVF Display. When turning on LCD Display, place some paper or tape, etc. on LCD open/close SW. so that this SW. stays ON.
4. When servicing, avoid causing a from touching the component side of the Battery Catcher Unit to the Main C.B.A.

5. **When servicing with the Main C.B.A. installed on the VCR Mechanism Chassis Ass'y (Main C.B.A. in raised position), tighten 2 Screws for stability.**
6. **Use a grounded ESD wrist strap while disassembling the Lens portion.**
7. **Use extreme care when unplugging or plugging in connectors.**

Fig. 1

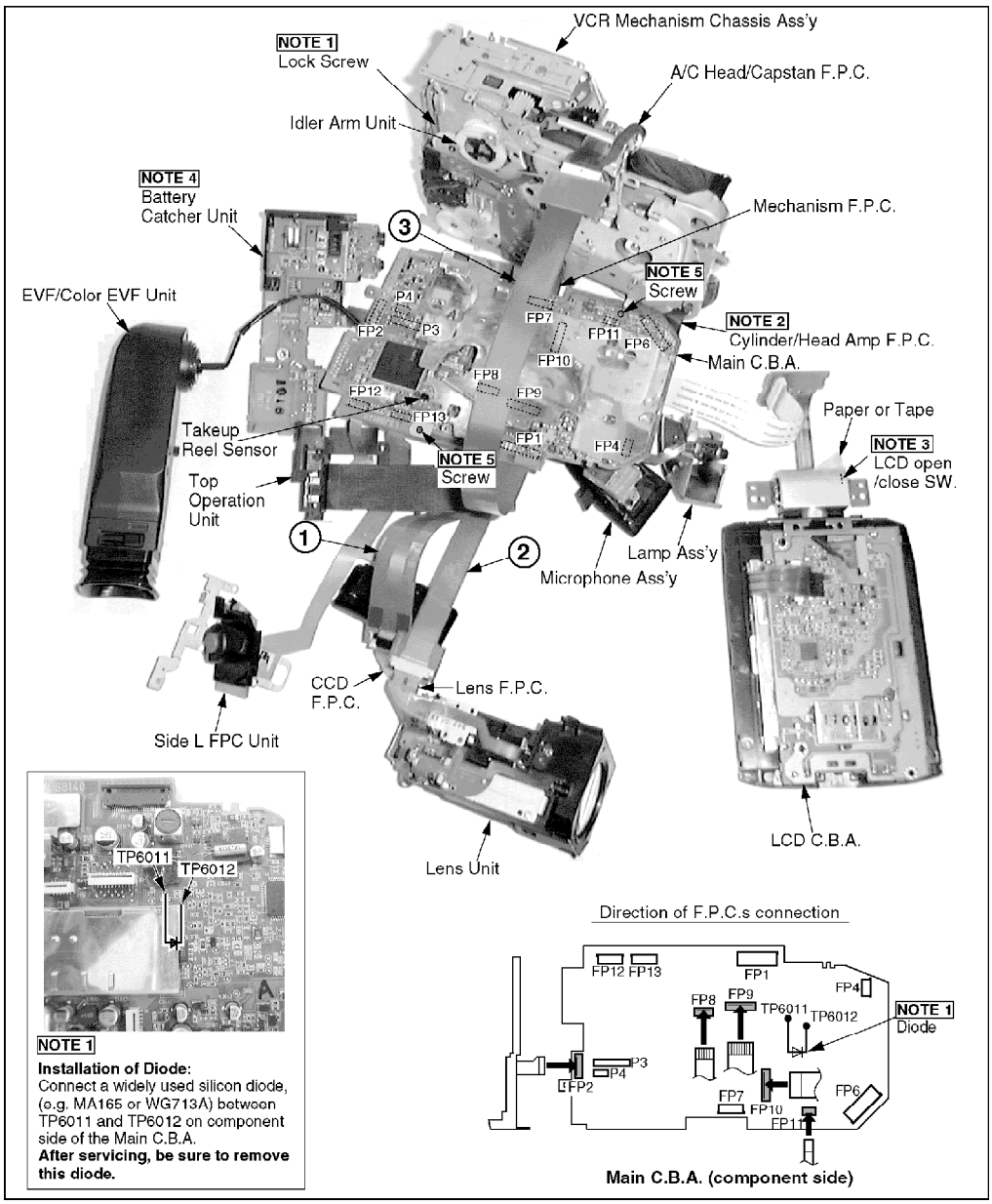

4.1.2. HOW TO HOLD THE CASSETTE UP UNIT IN THE DOWN POSITION WITHOUT CASSETTE COVER INSTALLED

The Cassette Up Unit will be in the up position without the Cassette Cover installed.

To hold the Cassette Up Unit in the down position without it, a Lock Screw is needed.

Lock Screw (VHDW0125)

A Lock Screw is supplied as a service fixture.

4.1.2.1. How to install the Lock Screw:

1. If the Lock Lever, shown in gray, is set to Position "A" (No hole), change Position "A" (No hole) to Position "B" (Hole) as shown in Fig. 2-2 by pushing Portion (a) as shown in Fig. 2-1.

Note:

If the mechanism is in EJECT position, the Lock Lever cannot be changed to Position "B" by pushing Portion (a). In this case, apply power to set the mechanism to STOP position.

Fig. 2-1

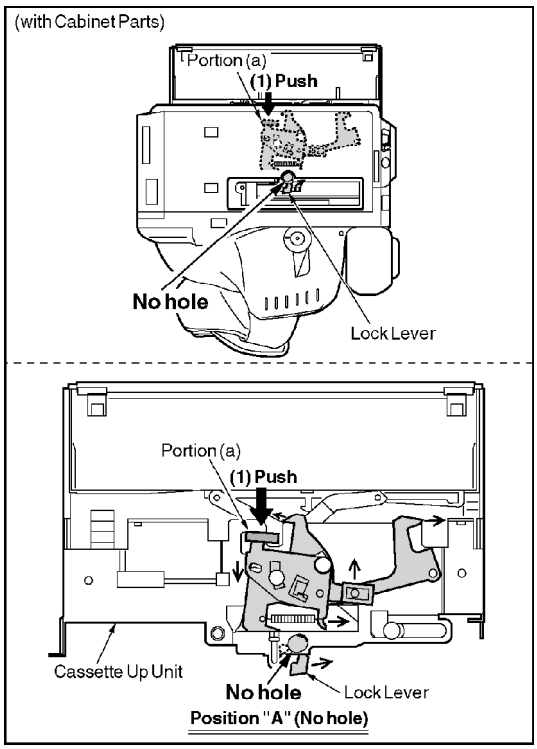

Fig. 2-2

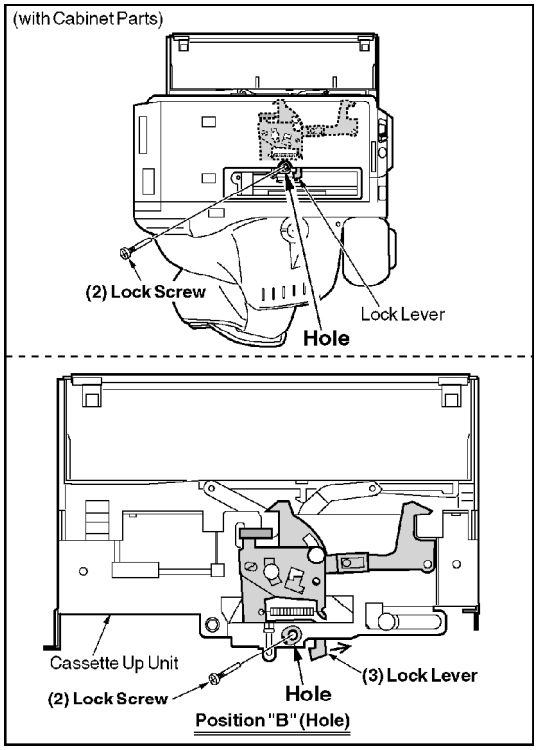

2. **Install the Lock Screw in the Hole (Threaded Hole for Lock Screw access) in Position "B".**
3. **Hold down the Cassette Up Unit and confirm that the Cassette Up Unit will stay in the down position.**

   Note:

   If the Cassette Up Unit will not stay in the down position, slide the Lock Lever to the right slightly.

4.1.2.2. Lock Screw is required when:

1. **performing "TAPE INTERCHANGEABILITY ADJUSTMENT."**
2. **servicing with cassette tape in Service Position. The procedure below is required when the unit is in safety defeat mode.**
   - **A. Confirm that the Lock Lever, shown in gray, is set to Position "A" as shown in Fig. 2-1, and that the mechanism is in the STOP position.**
   - **B. Insert the cassette tape.**
   - **C. Push Portion (a) as shown in Fig. 2-1 while keeping the Cassette Up Unit in the down position so the mechanism starts loading. (Cassette Down Switch is ON.)**

CAUTION:

1. After servicing, be sure to remove the Lock Screw.
2. The replacement Cassette Up Unit and VCR Mechanism Chassis Ass'y are supplied with a Lock Screw installed. Make sure to remove this Lock Screw when replacing them.

4.1.3. SERVICE MODE SPECIFICATION (SELF-DIAGNOSTIC SYSTEM)

Operation:

1. **Start-up: Press and hold all of the Display, REC, and Stop buttons over 2 seconds, the unit goes into the self- diagnostic mode and main menu appears.**
2. **Mode Selection: Press display button to change and select self-diagnose mode.**
3. **Close: Turn off the Power Switch.**

Display : Following descriptions can be displayed on EVF and TV monitor at the same time.

1. Main Menu

SERVICE MODE

START: DISPLAY BUTTON
QUIT : POWER OFF

* 32

Press and hold all of the Display, REC and Stop buttons over 2 seconds. The Main Menu appears on E.V.F. and TV monitor.

* This figure stands for the Model No. of camcorder as shown.

MODEL NO.	PV-L452	PV-L652
* Figure	31	32

DISPLAY BUTTON

2. Auto Stop

A.AUTO STOP

NORMAL * LOADING LOCK **
CYLINDER LOCK
TAKE-UP REEL LOCK
SUPPLY REEL LOCK
DEW
BATTERY UNDERCUT
STANDBY MODE

RESET: STOP BUTTON

When the unit suddenly shuts off, It is possible to see the cause description in this menu. Even if the AC adaptor or battery is disconnected, the most recent failure will be memorized. Pressing the Stop button at this time will reset the memory.

* Cause descriptions can be displayed until power shuts off.
** LOADING LOCK --- EJECT
STOP
STBY
REC / PB
(When it is possible to detect the lock position, loading lock position can be displayed.)

DISPLAY BUTTON

3. Auto Test

B.AUTO TEST

SET VCR/CAMERA SW TO CAMERA

1. CASSETTE TAPE IN
2. PRESS REC BUTTON

a. Cassette tape in and press REC button.
b. The unit operates automatically on tests.

REC BUTTON

B.AUTO TEST

■ REC

□ REVIEW

□ PLAY

□ REC PAUSE

a. Automatically operates REC (30sec), REVIEW, PLAY, and STOP.
b. Displays the test status while auto test is progressing. (■ Mark shows the test status.)

AUTO

B.AUTO TEST

NORMAL

Displays the test result.

LOADING LOCK **
CYLINDER LOCK
* TAKE-UP REEL LOCK
SUPPLY REEL LOCK
DEW
BATTERY UNDERCUT
STANDBY MODE

* Cause descriptions can be displayed until power shuts off.
** LOADING LOCK --- EJECT
STOP
STBY
REC / PB
(When it is possible to detect the lock position, loading lock position can be displayed.)

DISPLAY BUTTON

4. Motor Control Signal Check

C.SIGNAL TEST

CAPSTAN(M)	: STOP	FWD, REV
CYLINDER(M)	: ON	OFF
LOADING(M)	: STOP	FWD, REV
ZOOM(M)	: STOP	WIDE, TELE
FOCUS(M)	: STOP	FAR, NEAR
IRIS(F NO.)	: 7F	NO.*
CASSETTE SW	: DOWN	UP
SAFETY TAB SW	: OK	BRK

Displays all of motor drive signals and switch inputs from mechanism chassis.
* Iris No. display

DISPLAY BUTTON

5. Operation Button Test - VCR

D.OPERATION TEST-VCR

PRESS BUTTON

				ON
STOP	: OFF	EJECT	: OFF	
REC	: OFF	UP	: OFF	
REW	: OFF	DOWN	: OFF	
FF	: OFF	SPEED	: SP	SLP
STILL	: OFF	PLAY	: OFF	ON
VCR/CAMERA	: VCR			CAMERA

Tests connection of VCR operation buttons by pressing each button.

DISPLAY BUTTON

6. Operation Button Test - Camera

```
E.OPERATION TEST-CAMERA

SET VCR/CAMERA SW TO
CAMERA BEFORE CHECK
                                    ON
TELE  : OFF   FOCUS  : OFF
WIDE  : OFF   EIS    : OFF
FADE  : OFF   D.ZOOM : OFF
LIGHT : OFF   STILL  : OFF
B.L.  : OFF   MENU   : OFF
```

Tests connection of camera operation buttons by pressing each button.

DISPLAY BUTTON

7. Loading Test

```
F.LOADING TEST

SET VCR/CAMERA SW
TO VCR

START: REC BUTTON
QUIT   : STOP BUTTON
```

Repeats loading / unloading 10 times without tape to check loading mechanism.

DISPLAY BUTTON

8. Mechanism Position

```
G.MECHANISM POSITION

■ EJECT

□ STOP STANDBY

□ STANDBY

□ REC/PLAY/FF
```

Displays mechanism position by monitoring mode switch. (■ mark shows the current mechanism position.)

DISPLAY BUTTON

9. Safety Defeat

H.SAFETY DEFEAT

SET VCR/CAMERA SW
TO VCR

1.CLOSE CASSETTE DOOR
WITHOUT TAPE

2.PRESS OPERATION
BUTTONS

a. Defeats following safety functions. Cylinder lock, Reel lock, End of tape, Battery under cut, Safety tab switch.
b. It is possible to check mechanism movement without tape by pressing operation buttons in this mode.

Another Method to put the unit into Safety Defeat mode:
Connect a silicon diode between TP6011 and TP6012 on component side of the Main C.B.A.
Refer to "EXTENSION CABLES FOR SERVICE" in "SERVICE NOTES."

DISPLAY BUTTON

10. Tracking Fix

I. TRACKING FIX

Functions to fix tracking position to its center for tape path alignment.

DISPLAY BUTTON

11. PG Shifter

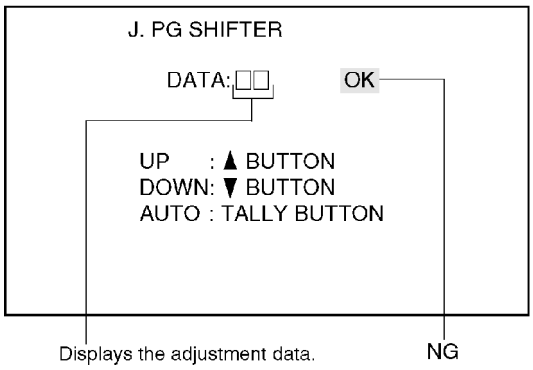

This is a function to adjust Head Switching Position (PG SHIFTER) without using the Personal Computer.
Perform adjustment procedure (AUTO) or (MANUAL).
To adjust with this function, the TP Board, Audio/Video cable, oscilloscope, and VHS-C Alignment Tape (VFMS0004H6C) are necessary.
For connecting TP Board, refer to "HOW TO USE TP BOARD" in SERVICE NOTES.

Adjustment procedure (AUTO)

1. Insert the VHS-C Alignment Tape to the camcorder.
2. Press PLAY button.
3. Press TALLY (REC) button while playing back.
   Head Switching Position (PG SHIFTER) will be adjusted automatically.
4. "OK" indicator will be displayed on EVF.
   Note:
   If "NG" indicator is displayed, adjust again.
5. Confirm that T is 6.5 H±0.5 H (approx.0.4 ms) as shown.

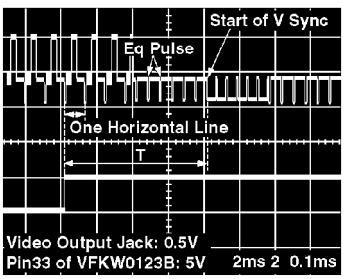

Adjustment procedure (MANUAL)

1. Perform steps 1 ~ 2 in Adjustment procedure (AUTO).
2. Press UP▲ or Down▼ button while playing back so that T is 6.5 H±0.5 H (approx. 0.4 ms).

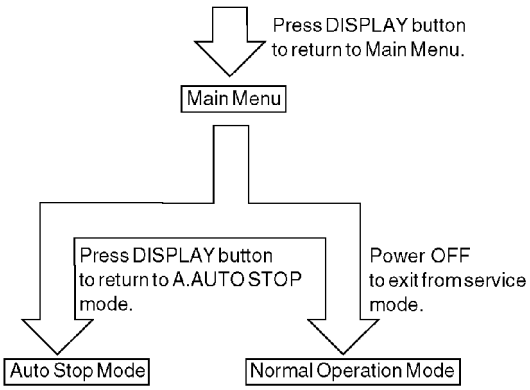

If any of the following numbers appear on-screen in Photo mode, the palmcorder may need service. Do not remove the battery (if attached) and write down the displayed number.

Error No.	Description
U11	Card Error
U12	Card Error
U13	Card Error
U14	Card/Camcorder Dialogue Error
U15	No Card Memory
U16	Captured image limit exceeded
U17	Captured image limit exceeded
U30	Error other than above

Note:

While battery remains, the Error No. will be displayed again when the power is switched off and on again. (Once the Battery is removed or dead, Error No. will not remain in the memory.)

4.1.4. REMOVAL/INSTALLATION OF F.P.C. FROM NON ZIF (ZERO INSERTION FORCE) CONNECTOR

Removal/Installation of F.P.C. from the Non ZIF (Zero Insertion Force) connector:

1. **There are 2 types (Type A, Type B) of Non ZIF connectors.**
2. **To remove the F.P.C. from the Non ZIF connector, use the Plier for Non ZIF Connector (LSVQ0028) to pull out the F.P.C. as shown. The same Plier for Non ZIF Connector (LSVQ0028) should also be used to install the F.P.C. to the Non ZIF Connector.**

FIg. 3-1

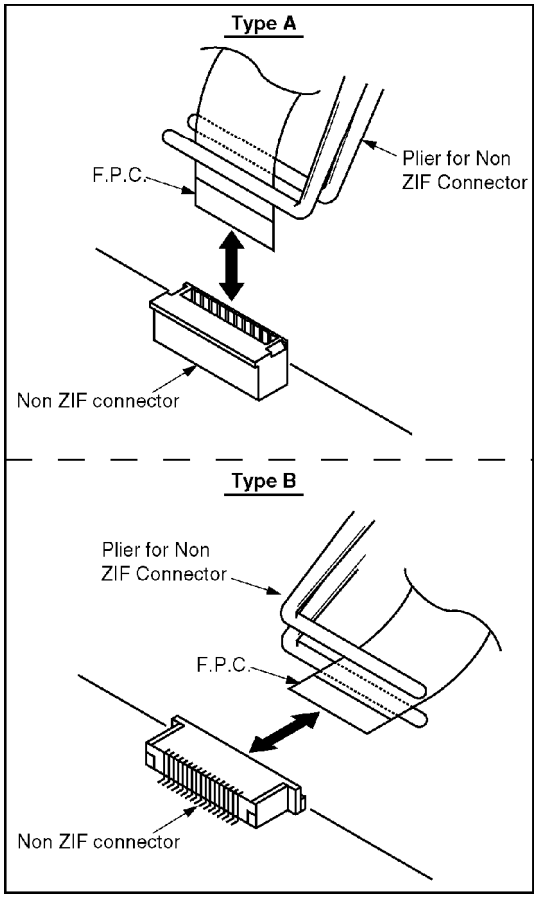

3. Connect the F.P.C.s to the Non ZIF connectors, verifying the direction of F.P.C as shown.

Fig. 3-2

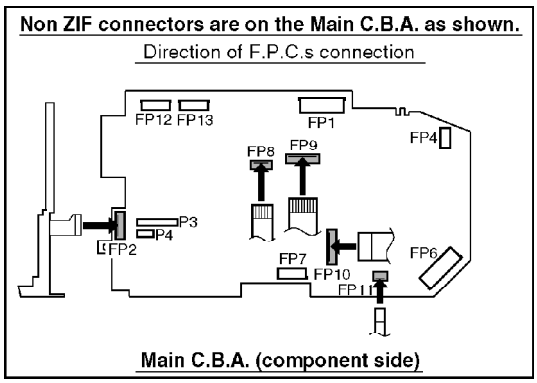

4.1.5. METHOD FOR LOADING/UNLOADING OF MECHANISM

4.1.5.1. (Electrical Method)

CAUTION:

If loading does not start after DC Power Supply is applied, DO NOT continue to applying DC Power Supply.

Connect the TP Board as shown, and apply 3 VDC Power Supply (DC (+) to TP21, DC (-) to TP20 for loading or DC (+) to TP20, DC (-) to TP21 for unloading). Refer to "HOW TO USE TP BOARD."

It normally takes approx. 6 seconds to unload the Mechanism from fully-loaded position to EJECT position.

Fig. 4-1

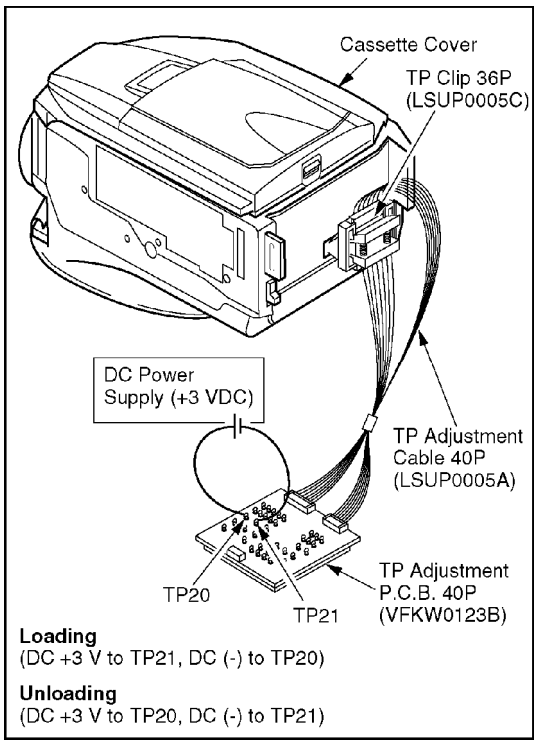

4.1.5.2. (Manual Method) without Cabinet Parts

Turn the Gear of Reduction Gear Unit clockwise (for loading) or counterclockwise (for unloading) manually.

It is necessary to rotate approx. 80 times from fully-loaded position to EJECT position.

Fig. 4-2

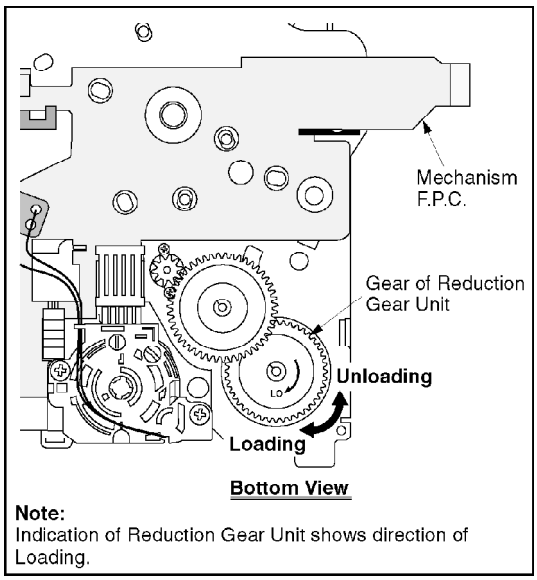

4.1.6. HOW TO REMOVE A JAMMED TAPE

CAUTION:

If loading does not start after DC Power Supply is applied, DO NOT

continue applying DC Power Supply.

Remove a jammed tape as follows:

1. Remove a Screw and remove the EVR Cover.

Fig. 5-1

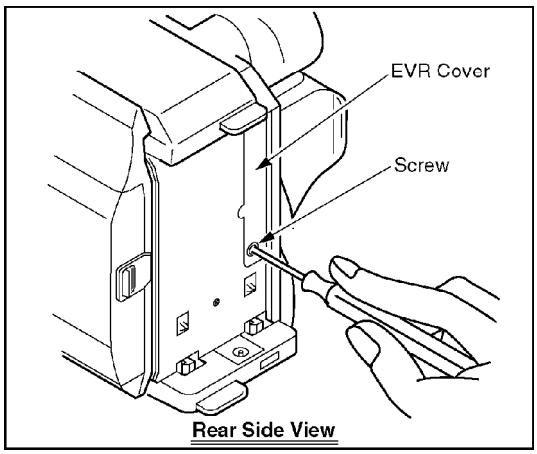

2. Place the unit with the Cassette Cover facing upward.

3. Connect the TP Board through the TP Board slot.

4. Apply +3VDC Power Supply to TP20 (+) and TP21 (-) on the TP Board to unload the mechanism. It normally takes approx. 6 seconds to unload the Mechanism to EJECT position. Then, remove the Power Supply and remove the TP Board.

Fig. 5-2

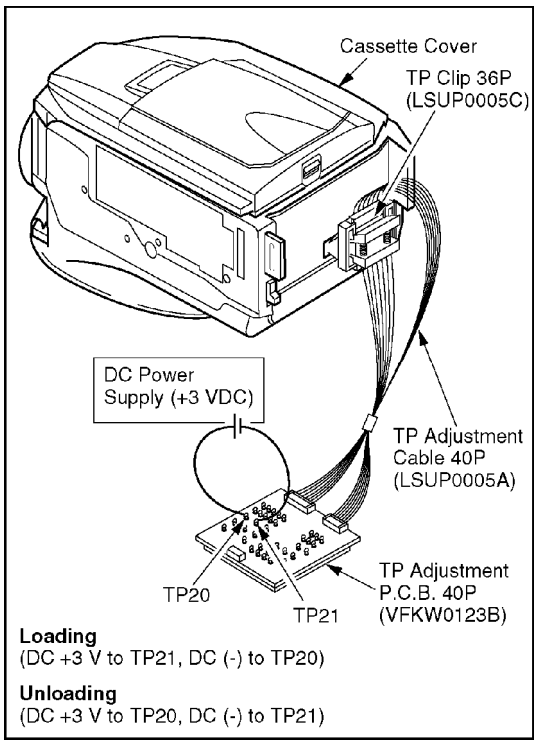

5. Open the Cassette Cover fully.

6. Remove the tape slack by rotating the Takeup Reel Gear of the cassette tape.

Fig. 5-3

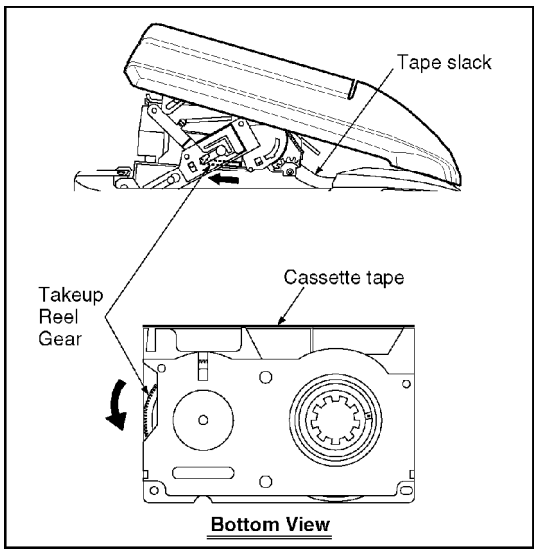

7. Take out the cassette tape.

8. Connect the Power or Battery to set the Mechanism to STOP Position.

4.1.7. HOW TO USE TP BOARD

4.1.7.1. TP Board is required when:

1. performing "TAPE INTERCHANGEABILITY ADJUSTMENT."
2. performing "PC-EVR Adjustment."
3. the cassette tape is jammed. Refer to "HOW TO REMOVE A JAMMED TAPE."
4. loading or unloading the Mechanism (Electrical Method).
5. performing a signal check.

4.1.7.2. How to assemble TP Board:

1. Assemble the TP Board as shown.

Fig. 6-1

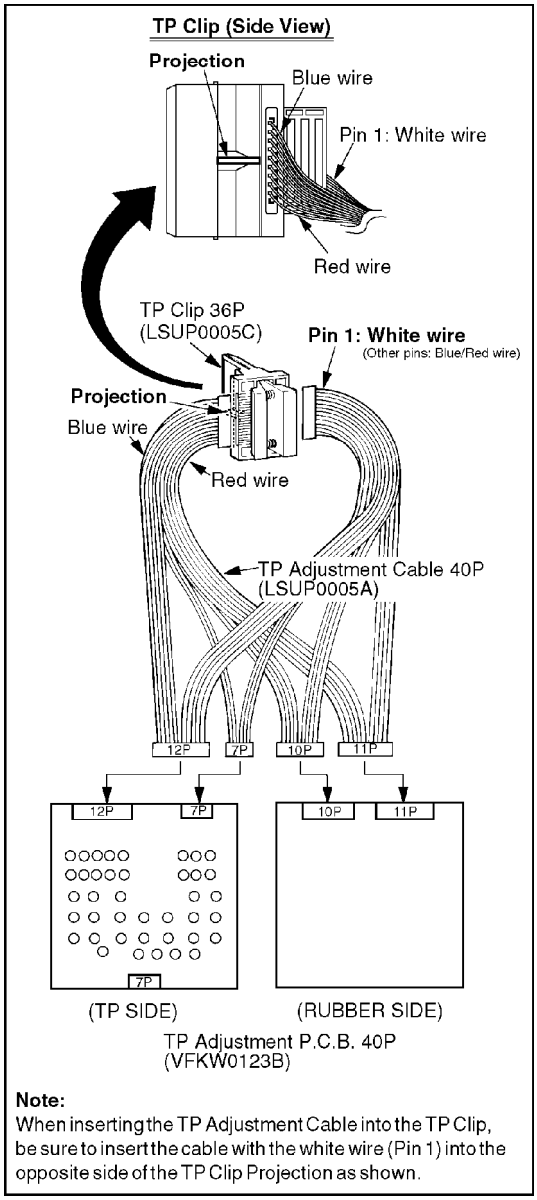

4.1.7.3. How to connect TP Board to Camcorder:

1. Connect the TP Board to Camcorder as shown.

Fig. 6-2

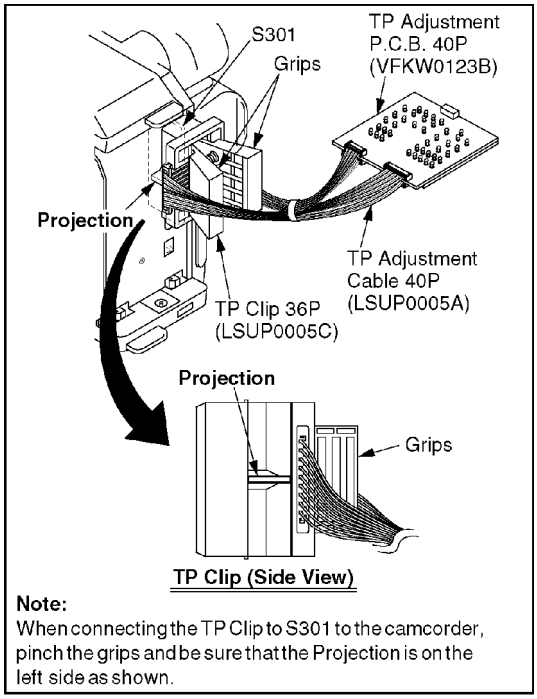

4.1.7.4. Signal description on TP Adjustment P.C.B. 40P (VFKW0123B)

Fig. 6-3-1

Pin No.	Signal Name	Description	Waveforms
1	GND	Grounding terminal	----------
2	IRIS	To monitor IRIS at Pin 33 of IC605 on Main C.B.A.	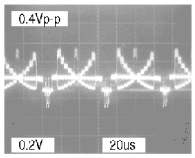 Camera Mode (Gray Scale Chart)
3	GND	Grounding terminal	----------
4	Not used	----------	----------
5	Not used	----------	----------
6	EVR MODE (L)	EVR mode select: low	----------
7	CAM +4.5 V	Power terminal	----------
8	EVR SERIAL DATA 1	Serial data output from PC to camcorder	----------
9	V-SYNC	To monitor V sync signal at Pin 18 of IC602 on Main C.B.A.	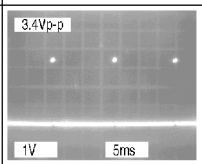 Camera Mode
10	EVR SERIAL DATA 0	Serial data output from camcorder to PC	----------
11	CAMERA RESET (L)	Camera microcontroller reset: low	----------
12	Not used	----------	----------
13	EVR SERIAL CLOCK	Serial clock between PC and camcorder	----------
14	EVF +4.5 V	Power terminal	----------
15	Not used	----------	----------
16	Color EVF-Blue	To monitor Color EVF blue signal at Pin 11 of IC901 on Color EVF C.B.A.	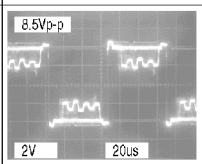 Rec/PB Mode (Color Bar Chart)
17	Color EVF-Green	To monitor Color EVF green signal at Pin 14 of IC901 on Color EVF C.B.A.	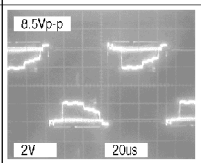 Rec/PB Mode (Color Bar Chart)

Fig. 6-3-2

Pin No.	Signal Name	Description	Waveforms
18	LUMINANCE	To monitor luminance signal at Pin 78 of IC301 on Main C.B.A.	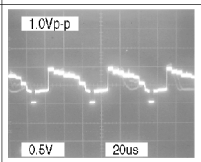 Camera Mode (Color Bar Chart)
19	Color EVF-Red	To monitor Color EVF red signal at Pin 16 of IC901 on Color EVF C.B.A.	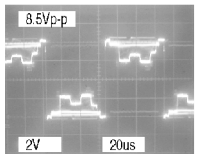 Rec/PB Mode (Color Bar Chart)
20	LOADING MOTOR 0	To monitor supply voltage to loading motor (+4.5 V or GND)	----------
21	LOADING MOTOR 1	To monitor supply voltage to loading motor (+4.5 V or GND)	----------
22	SUPPLY REEL PULSE	To monitor supply reel pulse at Pin 80 of IC6001 on Main C.B.A.	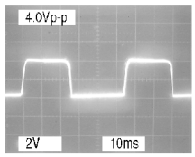
23	Not used	----------	----------
24	Not used	----------	----------
25	PB CTL PULSE	To monitor PB control pulse at Pin 76 of IC6001 on Main C.B.A.	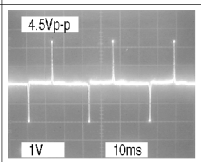 PB Mode
26	SUPPLY PHOTO TR (L)	To monitor Supply Photo TR signal (TR on: low)	----------
27	CAP FG	To monitor capstan FG signal at Pin 67 of IC6001 on Main C.B.A. (SP: 2155 Hz, SLP: 719 Hz)	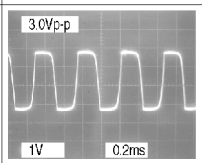 PB Mode(SP) 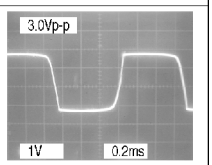 PB Mode(SLP)
28	TRAP MONITOR	To monitor B-Y signal at Pin 37 of IC3001 on the Main C.B.A.	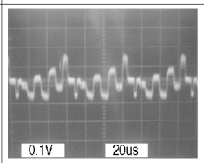 Rec/PB Mode (Color Bar Chart)

Fig. 6-3-3

Pin No.	Signal Name	Description	Waveforms
29	H SYNC	To monitor H sync signal at Pin 61 of IC3001 on Main C.B.A. (In EVR adjustment mode, 629kHz carrier appears.)	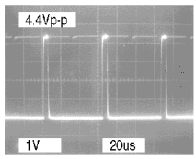 Rec/PB Mode
30	PB LUMINANCE	To monitor PB luminance signal at Pin 23 of IC3001 on Main C.B.A.	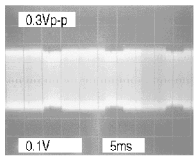 PB Mode
31	YNR	To monitor YNR error signal at Pin 21 of IC3001 on Main C.B.A.	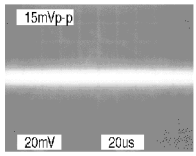 PB Mode
32	ENVELOPE	To monitor PB envelope signal at Pin1 of FP6 on Main C.B.A.	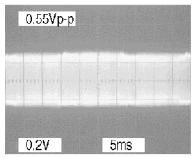 PB Mode
33	HEAD SW	To monitor head switching signal at Pin 23 of IC6001 on Main C.B.A.	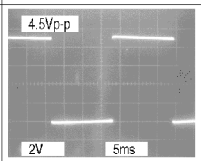 PB Mode
34	Not used	----------	----------
35	GND	Grounding terminal	----------
36	GND	Grounding terminal	----------
37	REC CHROMINANCE	To monitor recording chrominance signal at Pin 38 of IC3001 on Main C.B.A.	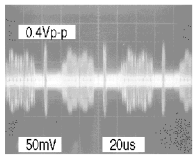 Rec Mode
38	REC LUMINANCE	To monitor recording luminance signal at Pin 27 of IC3001 on Main C.B.A.	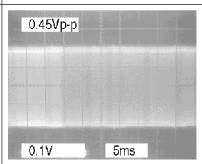 Rec Mode
39	Not used	----------	----------
40	Not used	----------	----------

4.1.8. EEPROM DATA

CAUTION:

Be sure to save the EEPROM data using PC-EVR Adjustment Program before service and adjustment in order to make sure to avoid an accidental data loss, etc. as follows. Refer to "SET UP OF PC-EVR ADJUSTMENT PROGRAM" in ELECTRICAL ADJUSTMENT.

EEPROM IC

C.B.A.	EEPROM IC Ref. No.
Main C.B.A.	IC306

How to save the EEPROM data to your PC

1. **Start up the PC-EVR Adjustment Program.**
2. **Select "1. Read (Save)/Write All EEPROM datas." in Main menu, and then press "Enter" key.**
3. **Select "1. Save all data of EEPROM" in Read (Save)/Write All EEPROM datas menu, and then press "Enter" key.**
4. **Input the File name, and then press "Enter" key. The data of EEPROM IC will be stored to your PC.**

How to write the EEPROM data which was stored in your PC to EEPROM IC
When it becomes impossible to adjust during service and adjustment, write the EEPROM data which was stored in your PC to EEPROM IC as follows. And readjust the camcorder.

1. **Start up the PC-EVR Adjustment Program.**
2. **Select "1. Read (Save)/Write All EEPROM datas." in Main menu, and then press "Enter" key.**
3. **Select "2. Data write using stored file" in Read (Save)/Write All EEPROM datas menu, and then press "Enter" key.**
4. **Input the saved file name, and then press "Enter" key. The data will be written in EEPROM IC.**

How to initialize the EEPROM IC
When the EEPROM IC (IC306) or Main C.B.A. is replaced, be sure to write the initial data to EEPROM IC. And adjust the camcorder.

1. **Start up the PC-EVR Adjustment Program.**
2. **Select "1. Read (Save)/Write All EEPROM datas." in Main menu, and then press "Enter" key.**
3. **Select "3. Data write with initial data" in Read (Save)/Write All EEPROM datas menu, and then press "Enter" key. And press "Enter" key once again. The initial data will be written in EEPROM IC.**

4.1.9. HOW TO REPLACE THE LAMP

DANGER:

Use only replacement Lamp (PART NO. VLLW0015) supplied by Panasonic to reduce risk of fire.
Handle new Lamp with cloth or tissue as skin oils will decrease Lamp life.
Remove Light Protector and allow Lamp to cool before replacing to avoid possible burn hazard.

Fig. 7

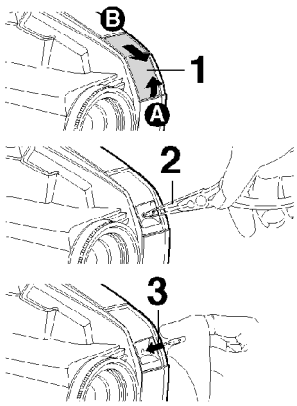

Before you begin...

Order Part No. VLLW0015 for replacement Lamp.
Set POWER to OFF.

1 **Slightly raise portion A of Light Protector to unhook, and slide portion B forward to remove.**

2 **Using Tweezers or needle-nose pliers, carefully remove Lamp.**

3 **Replace Lamp using a clean cloth or tissue. (Do not touch with fingers.)**

4 **Replace Light Protector.**

Note:
Handle Lamp gently. Excessive force may cause Lamp to crack.

4.1.10. HOW TO ACCESS THE MANUAL TRACKING CONTROL

Press the UP▲(Tracking Up) or Down▼(Tracking Down) button to perform the Manual Tracking Adjustment in Playback Mode.

4.1.11. REPLACEMENT PROCEDURE FOR LEADLESS (CHIP) COMPONENT

The following procedures are recommended for the replacement of the leadless components used in this Unit.

1. Preparation for replacement

A. Soldering Iron

Use a pencil-type soldering iron using less than 30 watts.

B. Solder

Eutectic Solder (Tin 63 %, Lead 37 %) is recommended.

C. Soldering time

Do not apply heat for more than 4 seconds.

D. Preheating

Leadless capacitor must be preheated before installation. (130 °C ~ 150 °C, for about 2 minutes.)

Note:

A. Leadless component must not be reused after removal.

B. Excessive mechanical stress and rubbing of the component electrode must be avoided.

2. Removing the leadless component

Grasp the leadless component body with tweezers and alternately apply heat to both electrodes. When the solder on both electrodes is melted, remove leadless component with a twisting motion.

Note:

A. Do not attempt to lift the component off the board until the component is completely disconnected from the board by a twisting action. The leadless component is attached to the PCB with glue. So carefully twist the component when removing it so as not to break or damage any fail under the component.

B. Take care not to break the copper foil on the printed board.

Fig. 8-1

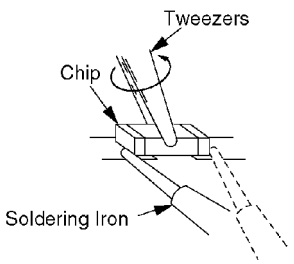

3. Installation of the leadless component

A. Presolder the contact points of the circuit board.

Fig. 8-2

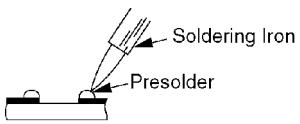

B. Press the part downward with tweezers and solder both electrodes as shown below.

Fig. 8-3

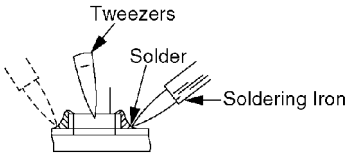

Note:

Do not glue the replacement leadless component to the circuit board.

4.1.12. SPECIAL NOTE

All integrated circuits and many other semiconductor devices are electrostatically sensitive and therefore require the special handlings techniques described under the "ELECTROSTATICALLY SENSITIVE (ES) DEVICES" section of this service manual.

4.1.13. IC501 AND IC6001 REPLACEMENT NOTE

IC501 and IC6001 are supplied together only as a Microcontroller Kit (LSUC0005). Microcontroller Kit consists of IC6001, IC501, and Instruction Sheet.
When replacing either IC6001 or IC501, be sure to replace both IC6001 and IC501. When R6001 is found on the Main C.B.A., be sure to remove it at the same time.
Otherwise, normal operation may not be possible.

Fig. 9

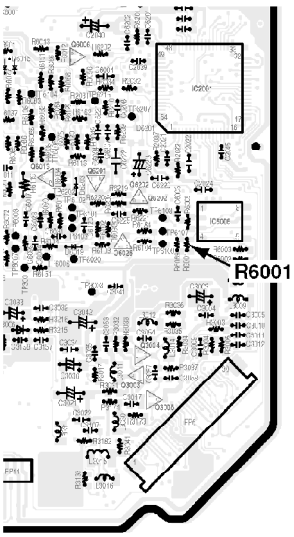

Main C.B.A. (component side)

4.1.14. MODEL NO. IDENTIFICATION MARK

Use Marks shown in the chart below to distinguish the different models included in this Service Manual.

MODEL	MARK
PV-L452	A
PV-L652	B
NOT USED	PT

Note:

Refer to Item 3 of Schematic Diagram Notes of Schematic Diagram

and Circuit Board Layout Notes, for Mark "PT."

5. DISASSEMBLY/ASSEMBLY PROCEDURES

5.1. CABINET SECTION

5.1.1. DISASSEMBLY FLOWCHART

This flow chart indicates the disassembly steps of the cabinet parts and the P.C.Boards in order to gain access to item (s) to be serviced. When reassembling, perform the step (s) in the reverse order. Bend, route and dress the wires as they were originally.

Fig. D1

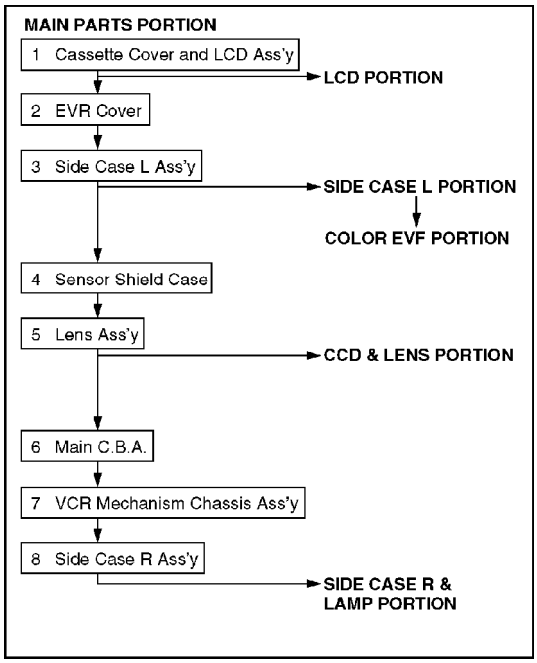

Note:

1. **When removing the cabinet, work with care so as not to break the Locking Tabs.**
2. **Place a cloth or some other soft material under the P.C. Boards or Unit to prevent damage.**
3. **When reinstalling, ensure that the connectors are connected and electrical components have not been damaged.**
4. **Do not supply power to the unit during disassembly and reassembly.**

5.1.2. Disassembly Method

5.2. MECHANISM SECTION

5.2.1. Disassembly Method

This procedure starts with the condition that the cabinet parts and Main C.B.A. have been removed.
When reassembling, perform the step(s) in the reverse order.
Perform all disassembly and alignments procedures in STOP Position except disassembly and alignment procedures which have the special Notes.

STEP LOC. No.	Prior Step (s)	Part	Fig. No.	Remove
1	-	Cassette Up Unit	DM3-1,2	2 632, 2(L-1)
2	-	Cylinder Unit	DM4-1	3 635, Hooking Portion
3	-	Not used	-	-
4	2	Cylinder/Head Amp F.P.C.	DM4-2	Connector, FP3501
5	2	Bulge Chip	DM4-2	629
6	-	P.C.B. Angle	DM5	413
7	-	Mechanism F.P.C. Unit	DM6-1,2	4 412, Hooking Portion, double-sided adhesive tape, Unsolder Gear Alignment (x1)
8	1,9	Tension Unit	DM7-1,2	411, Hooking Portion
9	1,8	Reel Table Unit	DM7-1,2	419, 410
10	1,8,9	Rev Clutch	DM8	419
11	1	Take Gear	DM9-1,2	(L-1)
12	1,11	Rev Brake Arm Unit	DM9-1,2	409, Hooking Portion
13	-	A/C Head Unit	DM10	408, Unsolder
14	-	Capstan Belt	DM11	-
15	6,13,14	Capstan Unit	DM12	3 407
16	1,6,7,11,12,14	Idler Arm Unit	DM13	419
17	2	Mechanism Support Angle	DM14	415
18	1	Reduction Gear B	DM15	411
19	-	Reduction Gear A	DM16	419
20	1,18	Reduction Gear Unit	DM16	2 632
21	1	Pinch Arm Unit	DM17	411
22	-	Not used	-	-
23	-	Not used	-	-
24	1,17	Takeup Post Unit	DM18-1,2	640
25	1	Supply Post Unit	DM18-1,2	416
26	-	Impedance Roller Unit	DM19-1,2	419
27	1,2,13,24,25	Loading Base Unit	DM19-1,2	4 415
28	1,2,8,9,13,24,25,27	Takeup Loading Arm Unit	DM20	- Gear Alignment (x1)
29	1,2,8,9,13,24,25,27	Supply Loading Arm Unit	DM21-1,2,3	- Gear Alignment (x2)
30	8,9,19	Loading Motor Unit	DM22	2 414
31	1,2,8,9,10,18,19,20,24,25,27,29,30	Main Cam Unit	DM22	-
32	1,2,8,9,10,18,19,20,24,25,27,29,30,31	Pinch Toggle	DM22	-

A B C D E

How to read chart shown above:
A: Order of Procedure steps.
When reassembling, perform steps(s) in reverse order.
These numbers are also used as the identification (location) No. of parts in Figures.
B: Steps to be completed prior to the current step.
C: Part to be removed or installed.
D: Fig. No. showing Procedure or Part Location.
E: Identification of part to be removed, unhooked, unlocked, released, unplugged, unclamped, or unsoldered.
2 632= 2 Screws 632, 2(L-1) =2 Looking Tabs (L-1)

CAUTION:
a. Use a wrist strap to provide ESD protection while disassembling or assembling.
b. Removed Cut Washer is not reusable. If removed, install a new one.
Following Cut Washers are to be used:

Ref. No.	Part No.
409	VMXW0217
411	VMXW0213
419	VMX2026

5.2.2. Inner Parts Location

Note:
BOX indicates alignment (Gear alignment or Tape Interchangeability adjustment) required when a part is replaced.

5.2.2.1. TOP VIEW

Fig. DM1-1

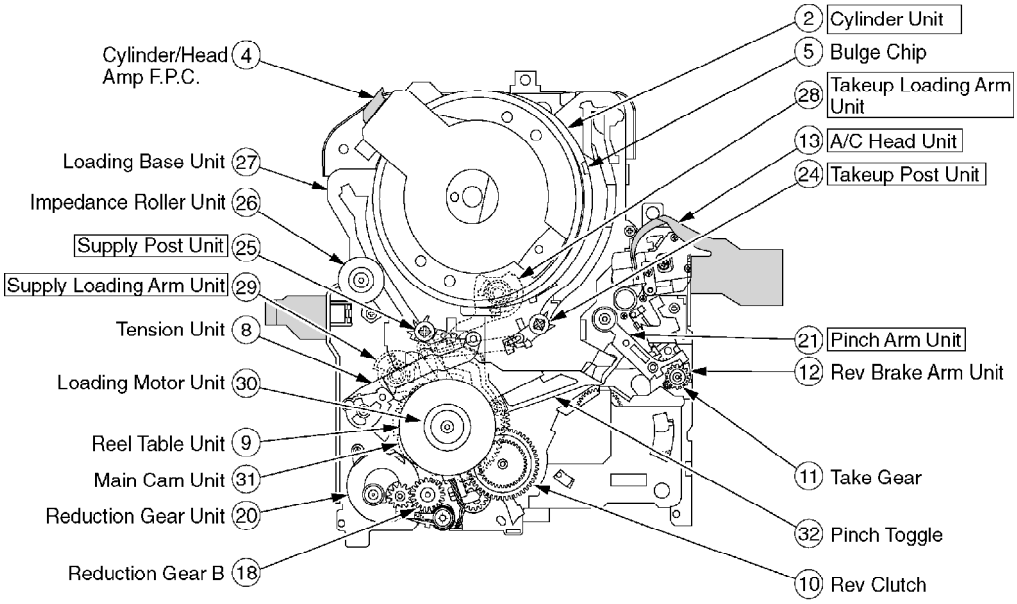

5.2.2.2. BOTTOM VIEW

Fig. DM1-2

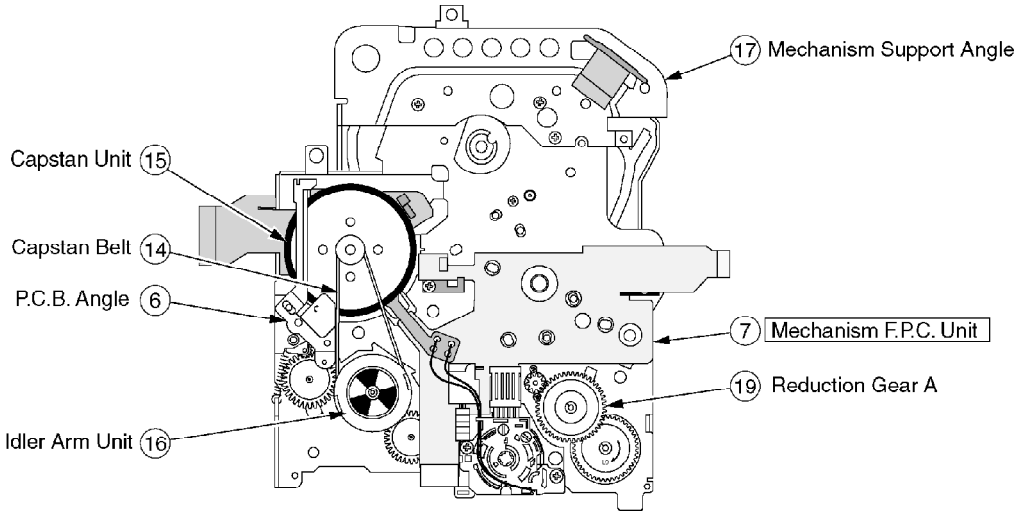

5.2.3. STOP Position Confirmation

Fig. DM2

Check the following alignment points to confirm that the Mechanism is in STOP Position from the Top and Bottom View.

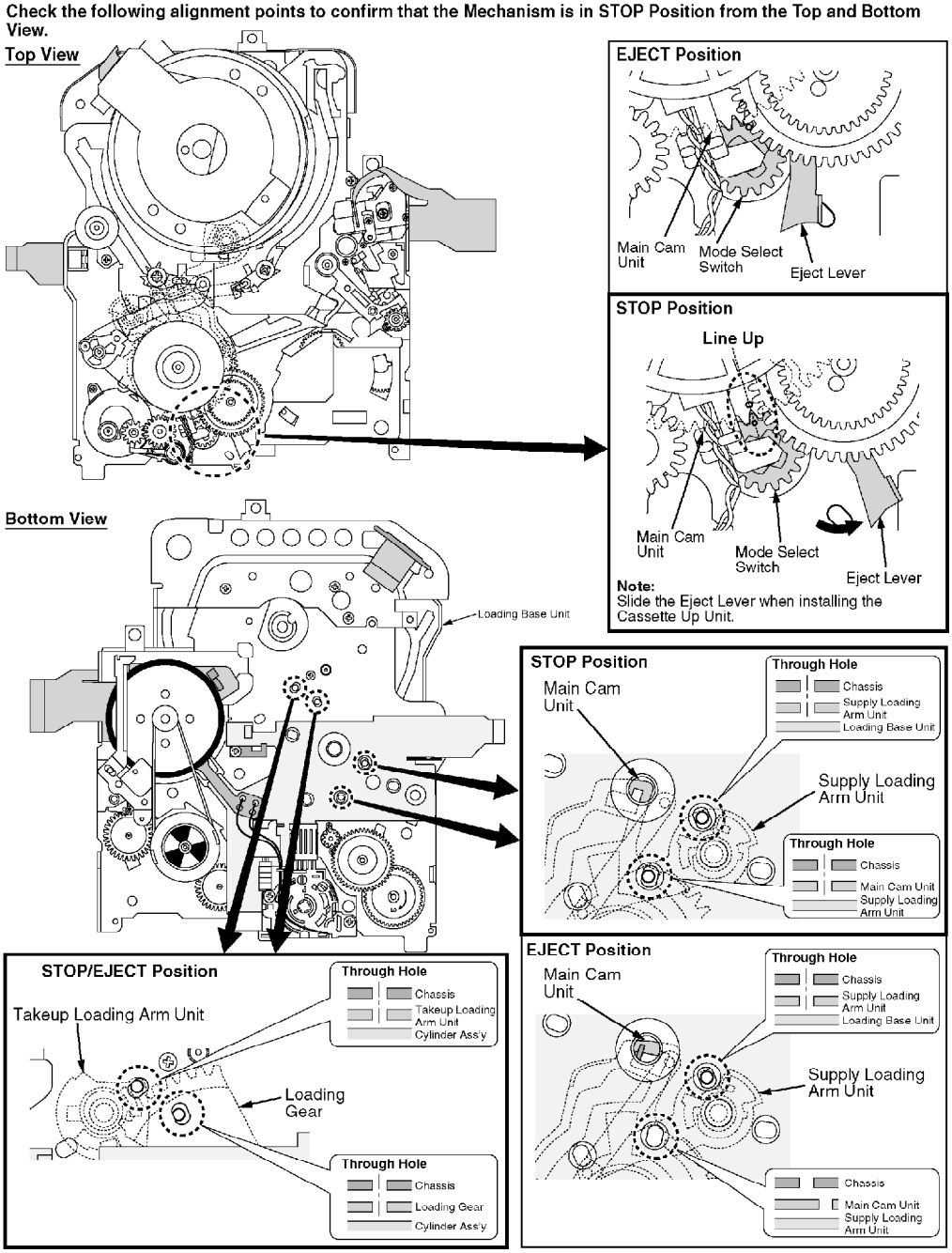

Perform all disassembly and alignments procedures in STOP Position except disassembly and alignment procedures which have the special Notes.

5.2.4. Cassette Up Unit

Fig. DM3-1

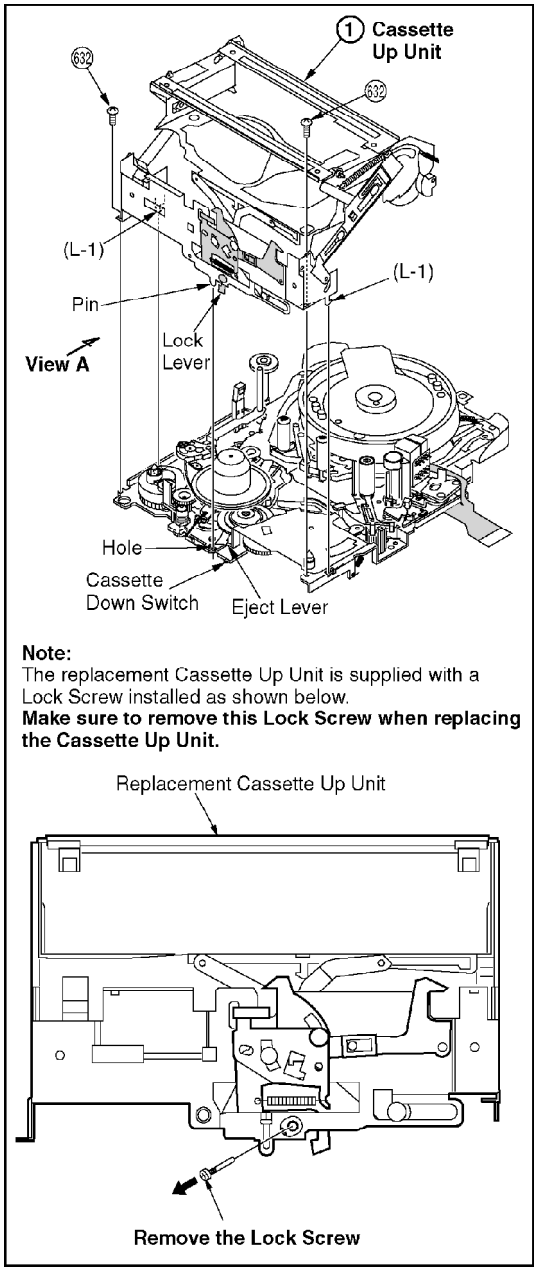
1 Cassette Up Unit
632
632
(L-1)
(L-1)
Pin
Lock Lever
View A
Hole
Cassette Down Switch
Eject Lever
Note:
The replacement Cassette Up Unit is supplied with a Lock Screw installed as shown below.
Make sure to remove this Lock Screw when replacing the Cassette Up Unit.
Replacement Cassette Up Unit
Remove the Lock Screw

Fig. DM3-2

Reassembly Note:

1. **Installation of the Cassette Up Unit**

Installation is possible except when the Mechanism is in Eject Position.

(1) Before installing the Cassette Up Unit, confirm that the Eject Lever is slid as shown.

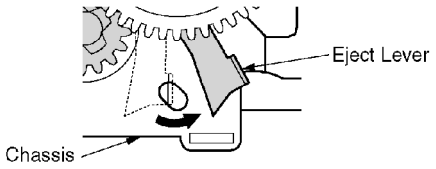

Top View

(2) Slide the Lock Lever. (Otherwise, the Lock Lever may damage the Cassette Down Switch when installing the Cassette Up Unit.)

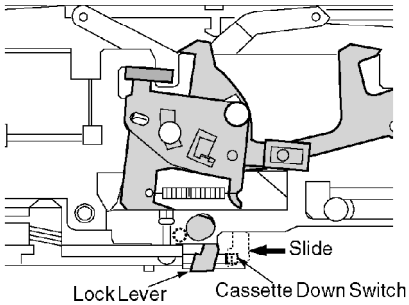

View A

(3) Then, Install the Cassette Up Unit while setting 2 Locking Tabs (L-1). Next, insert Pin into Hole on the Chassis.

(4) Slide the Cassette Up Unit as far as possible as indicated by the arrow. Then, tighten 2 Screws (632).

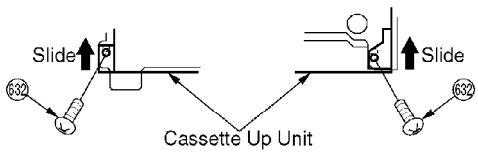

Top View

(5) After installing the Cassette Up Unit, confirm that the Lock Lever is on the left of the Eject Lever as shown.

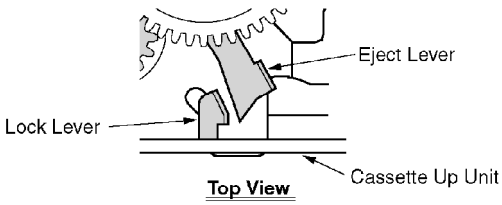

Top View

5.2.5. Cylinder Unit

Fig. DM4-1-1

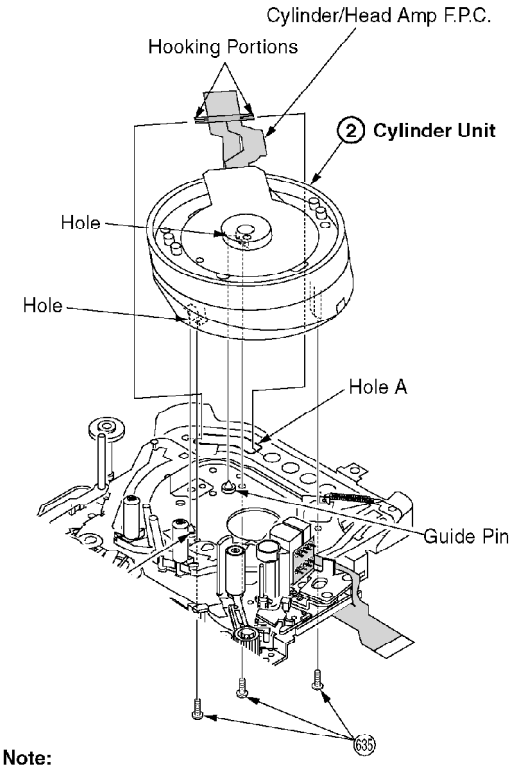

Note:

1. Use extreme care when removing the Cylinder Unit. Do not touch the Video Heads during servicing.
2. **Removal of the Cylinder Unit**

(1) Unhook the Cylinder/Head Amp F.P.C. while lifting up the Cylinder Unit slightly and remove it from the Hole A.

Reassembly Note:

1. Use extreme care when replacing the Cylinder Unit. Do not touch the Video Heads during servicing.
2. **Installation of the Cylinder Unit**

(1) Insert the Cylinder/Head Amp F.P.C. to Hole A first.
(2) Install the Cylinder Unit so that 2 Holes on the Lower Cylinder Unit surface fit over the 2 Guide Pins on the Chassis. Then, tighten 3 Screws 635.
(3) Hook the Cylinder/Head Amp F.P.C. as shown.

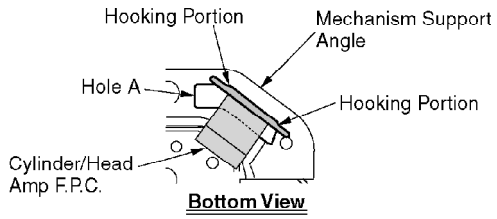

3. **Adjustment of the Cylinder Unit**

(1) After replacing, perform the "Tape Interchangeability Adjustment" procedures.

Fig. DM4-1-2

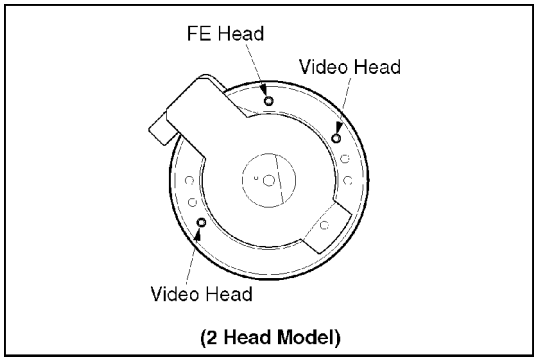

5.2.6. Cylinder/Head Amp F.P.C., Bugle Chip

Fig. DM4-2

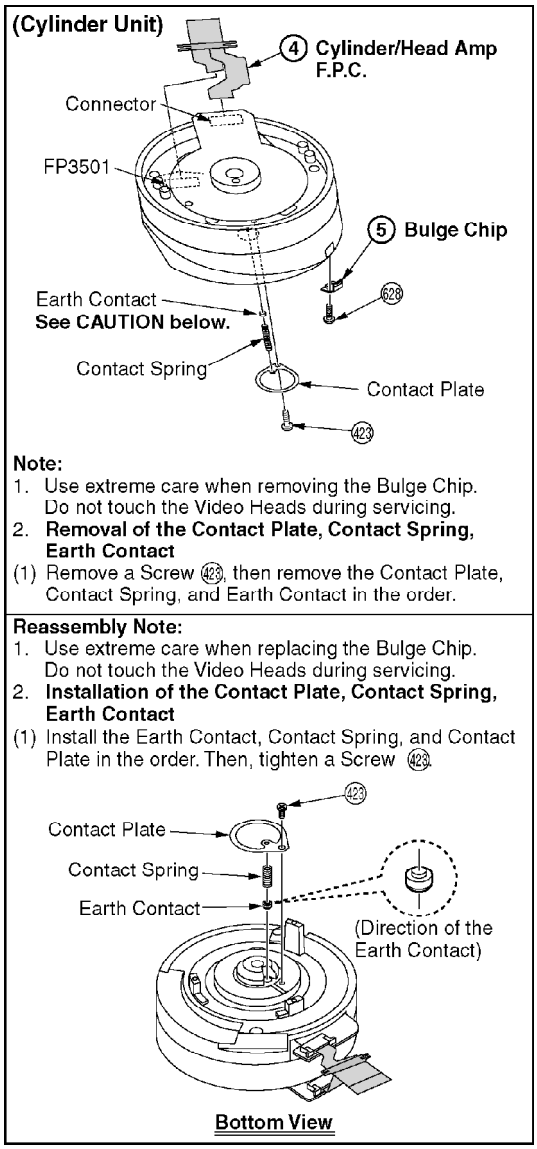

5.2.7. P.C.B. Angle

Fig. DM5

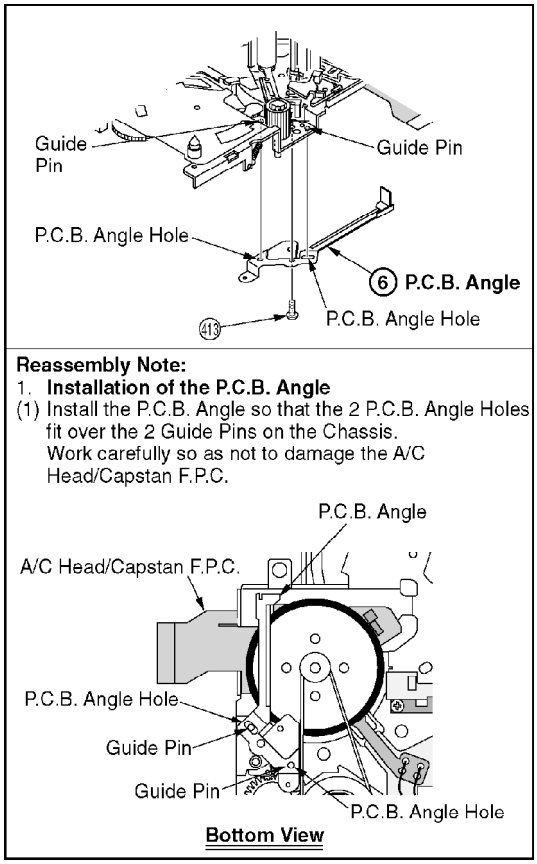

5.2.8. Mechanism F.P.C Unit

Fig. DM6-1

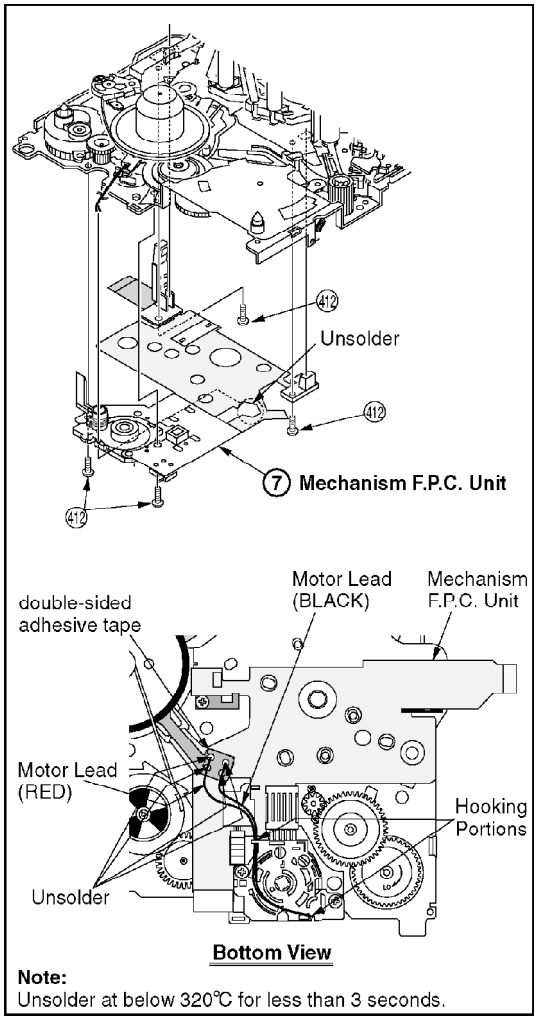

Note:
Unsolder at below 320℃ for less than 3 seconds.

Fig. DM6-2

Reassembly Note:

1. **Gear Alignment**
   - **The Mode Select Switch and the Main Cam Unit**

(1) Place the Mechanism in the **STOP Position** by rotating the Gear of Reduction Gear Unit.
(2) Before installing the Mechanism F.P.C. Unit, rotate the Mode Select Switch of Mechanism F.P.C. Unit so that Slot (A) is aligned with Slot (B).

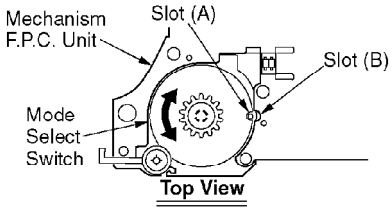

2. **Installation of the Mechanism F.P.C. Unit**

(1) Install the Mechanism F.P.C. Unit to the bottom of the Chassis. Then, tighten 4 Screws (412).
(2) Solder the Motor Leads as shown.
Note: Solder at below 320 °C for less than 3 seconds.
(3) Hook the Motor Leads and the tube to Hooking Portions together.
(4) Confirm that the Motor Leads are set correctly on the Mechanism F.P.C. Unit as shown.

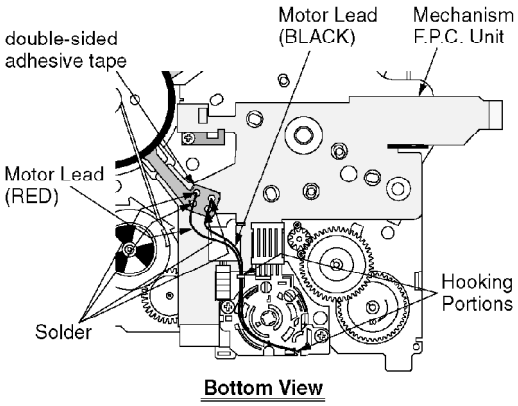

(7) Confirm that the Mode Select Switch is in STOP Position from the Top side.

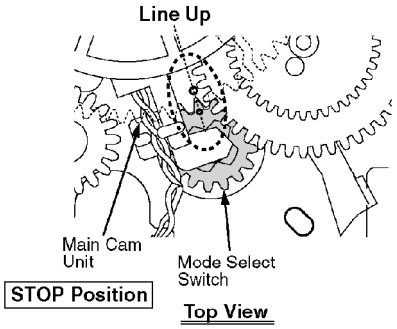

5.2.9. Tension Unit, Reel Table Unit

Fig. DM7-1

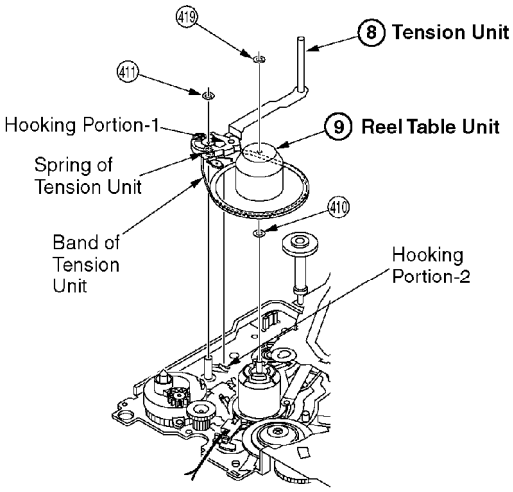

1. **Removal of the Tension Unit and the Reel Table Unit**

(1) Place the Mechanism in the **Fully-loaded Position**.
(2) Remove Cut Washers 411 and 419.
(3) Then, remove both the Tension Unit and the Reel Table Unit.

Fig. DM7-2

Reassembly Note:

1. **Installation of the Reel Table Unit and the Tension Unit**

(1) Before installing the Reel Table Unit and the Tension Unit, place the Mechanism in the **Fully-loaded Position** by rotating the Gear of Reduction Gear Unit.

(2) Install a Washer (410) onto the Loading Motor Unit first.

(3) Hook the Spring of Tension Unit to the Tension Unit as shown.

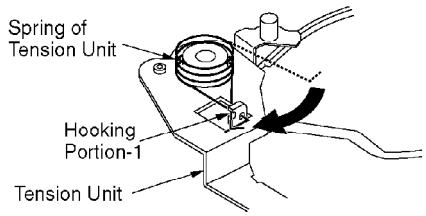

(4) Hook the Band of Tension Unit to the groove of Reel Table Unit.

(5) Install both the Reel Table Unit and Tension Unit to the Chassis so that the Pin A of Tension Unit is set into Slot A of the Main Cam Unit. Confirm that the Band of Tension Unit keeps off Projection A and B.

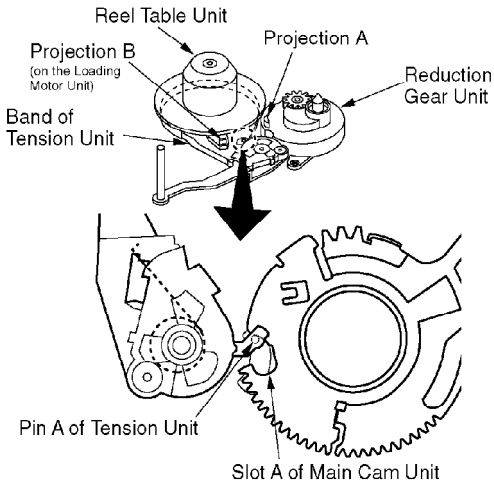

Fully-loaded (Play) Position

Top View

(5) Unhook the Spring of Tension Unit from Hooking Portion-1 with tweezers etc. inserted through Hole to let it hook to Hooking Portion-2 on the chassis.

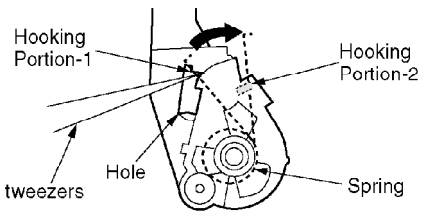

Top View

(6) Install Cut Washers (419), and (411).

5.2.10. Rev Clutch

Fig. DM8

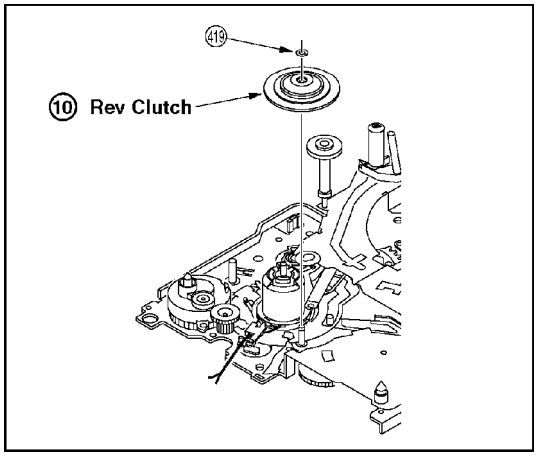

5.2.11. Take Gear, Rev Brake Arm Unit

Fig. DM9-1

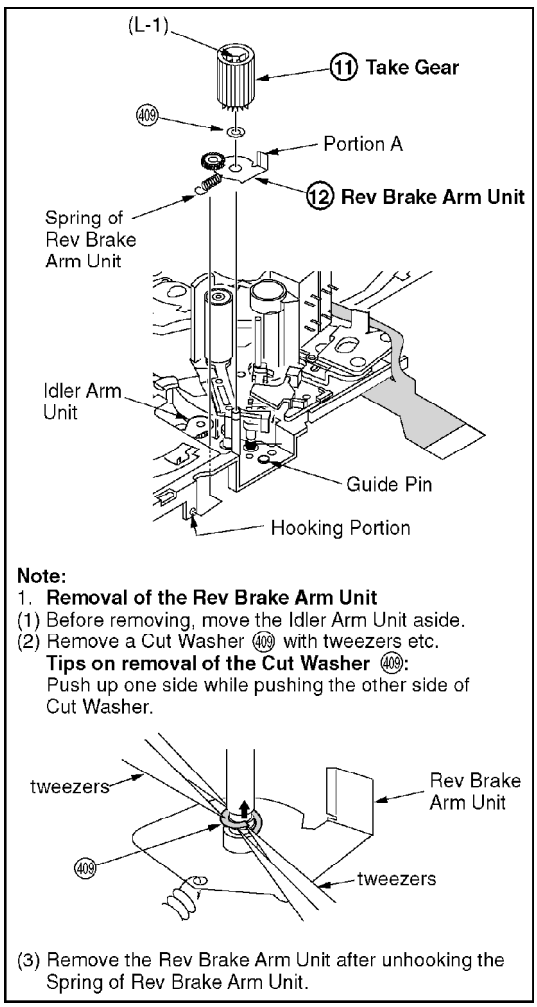

Fig. DM9-2

Reassembly Note:

1. **Installation of the Rev Brake Arm Unit**

(1) Before installing the Rev Brake Arm Unit, move the Idler Arm Unit aside as indicated by the arrow.

(2) Hook the Spring of Rev Brake Arm Unit to the Hooking Portion. After hooking the Spring, confirm that Portion A of the Rev Brake Arm Unit does not pass over the Guide Pin on chassis as shown.

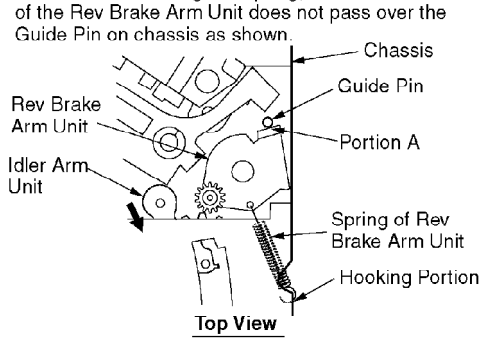

Top View

(3) Install a Cut Washer (409) with tweezers.

Tips on installation of the Cut Washer (409):
Push down one side while pushing the other side of Cut Washer.

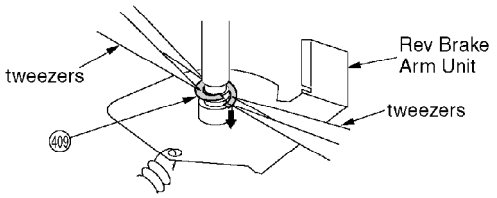

(4) After installing, confirm that a Cut Washer (409) can be rotated.

2. **Installation of the Take Gear**

(1) Before installing the Take Gear, move the Idler Arm Unit aside as indicated by the arrow.

(2) Install the Take Gear while rotating so it engages with Gear A so as not to cause damage.
Then, confirm that Locking Tab (L-1) is set.
Note: Use extreme care when installing the Take Gear. If Locking Tab (L-1) is broken, install a new Take Gear.

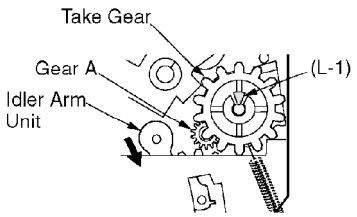

Top View

5.2.12. A/C Head Unit

Fig. DM10

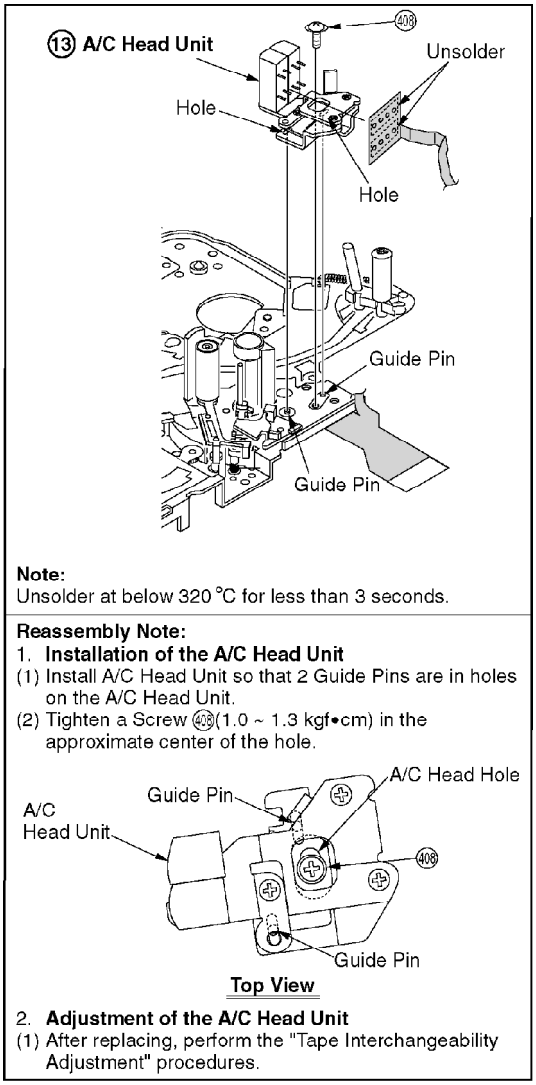

5.2.13. Capstan Belt

Fig. DM11

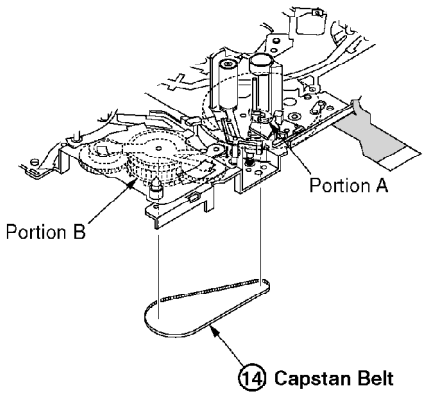

Reassembly Note:

1. **Tips on Installation of the Capstan Belt**

(1) Hook the Capstan Belt to Portion A of Capstan Unit at first as shown.
(2) Hook the Capstan Belt to Portion B of Idler Arm Unit.
(3) Rotate the Idler Arm Unit as indicated by the arrow (counterclockwise) and set it completely.

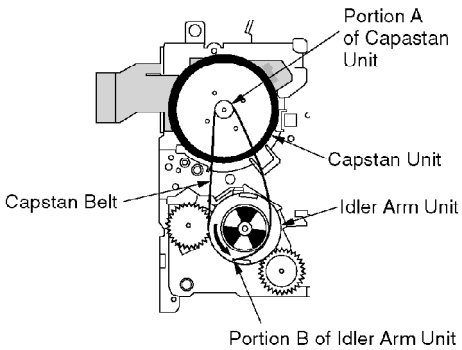

Bottom View

5.2.14. Capstan Unit

Fig. DM12

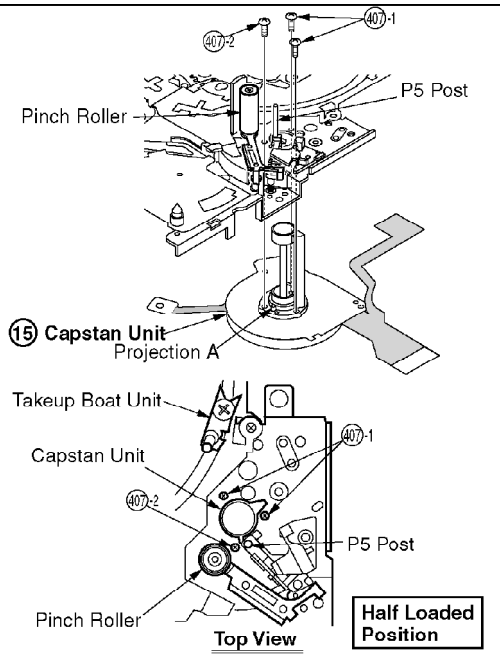

CAUTION:
Do not touch the P5 Post or the Pinch Roller.

1. **Removal of the Capstan Unit**

(1) To remove, put the mechanism in the **half loaded position** to gain access to a Screw 407-2 as shown by rotating the Gear of Reduction Gear Unit. Then, remove a Screw 407-2.

Reassembly Note:

1. Since the Capstan Unit has already been adjusted at the factory, do not try to adjust the FG Head. The Capstan Unit is supplied as a complete assembly as a replacement part.
2. **Installation of the Capstan Unit**

(1) Before installing the Capstan Unit, put the mechanism in the **half loaded position** to gain access to a Screw 407-2 for installing by rotating the Gear of Reduction Gear Unit.
(2) Install the Capstan Unit to the Chassis so that Projection A fit in the Slot on the Chassis.
(3) Tighten 2 Screws 407-1. Then, tighten a Screw 407-2.

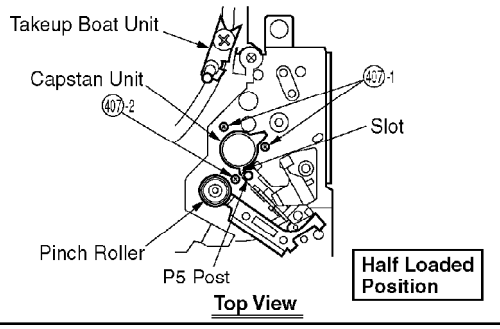

5.2.15. Idle Arm Unit

Fig. DM13

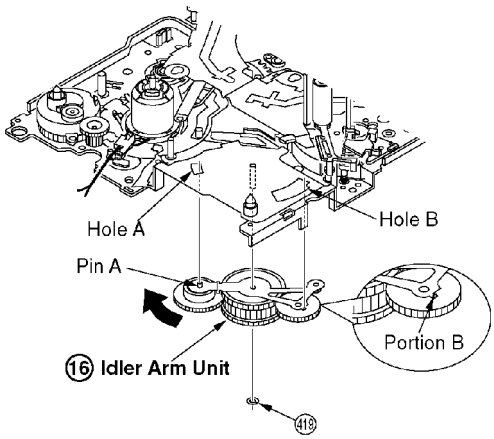

1. **Removal of the Idler Arm Unit**

(1) To remove the Idler Arm Unit, pull the Idler Arm Unit slightly from the Chassis to release Pin A from Hole A. Then, remove the Idler Arm Unit while turning as indicated by the arrow.

Reassembly Note:

1. **Installation of the Idler Arm Unit**

(1) Set the Idler Arm Unit so that Portion B is in Hole B as shown.

(2) Turn the Idler Arm Unit slightly as indicated by arrow to set Pin A in Hole A.

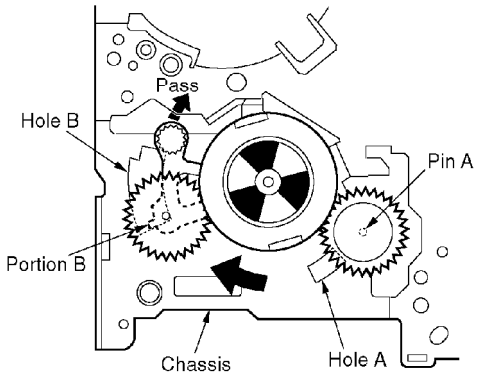

Bottom View

(3) Install a Cut Washer 419.

5.2.16. Mechanism Support Angle

Fig. DM14

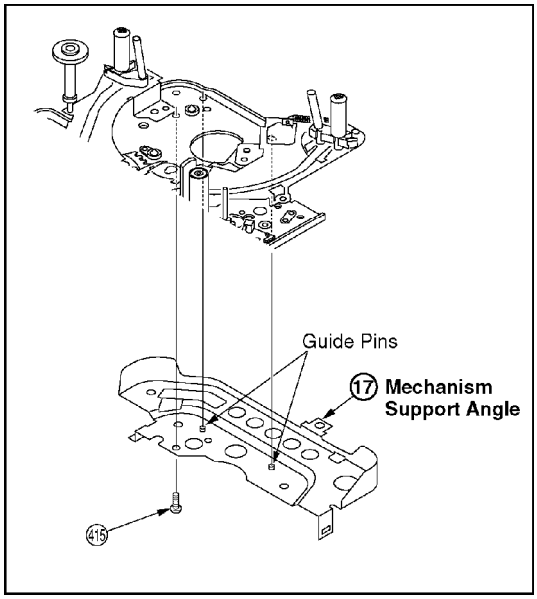

5.2.17. Reduction Gear B

Fig. DM15

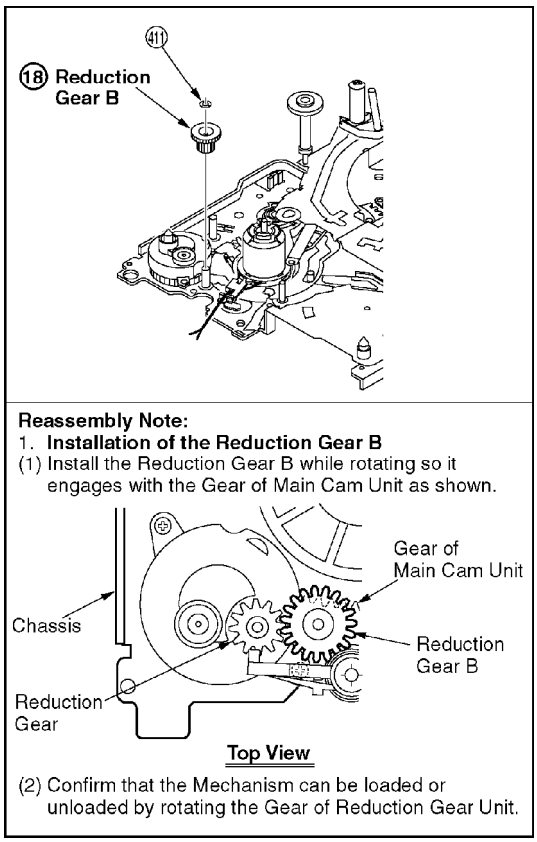

5.2.18. Reduction Gear A, Reduction Gear Unit

Fig. DM16

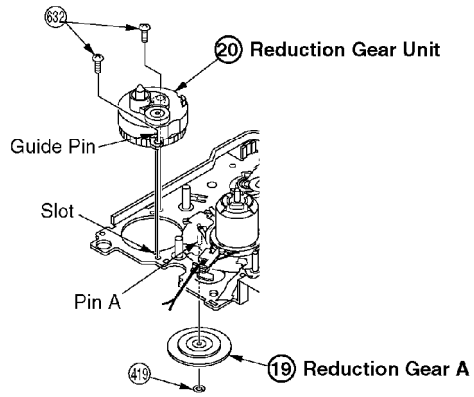

Indication on Gear of Reduction Gear Unit
The arrow indicated on the Gear of Reduction Gear Unit shows the direction to load.

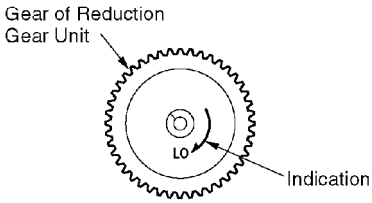

Bottom View

Reassembly Note:
1. **Installation of the Reduction Gear Unit**
(1) Install the Reduction Gear Unit so that Guide Pin fits in the Slot on the Chassis.
Then, tighten 2 Screws 632.

5.2.19. Pinch Arm Unit

Fig. DM17

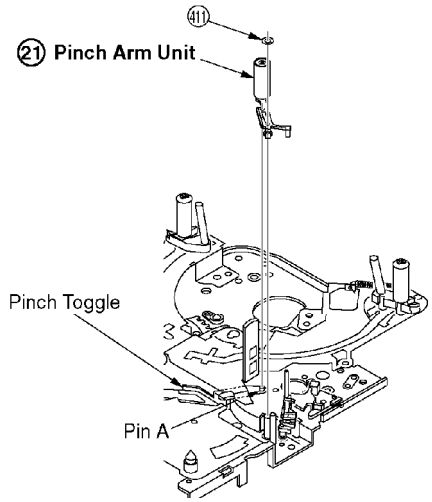

Reassembly Note:

1. **Installation of the Pinch Arm Unit**

(1) Install the Pinch Arm Unit.
(2) Fit Hole A on the Pinch Arm Unit over Pin A on the Pinch Toggle as shown.

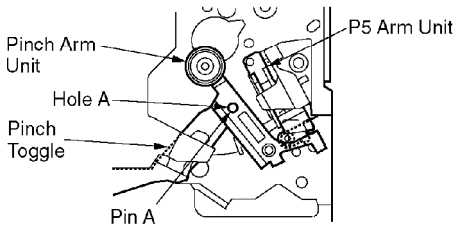

Top View

(3) Install the a Cut Washer 411.

2. **Adjustment of the P5 Arm Unit and the Pinch Arm Unit**

(1) After replacing, perform the "Tape Interchangeability Adjustment" procedures.

5.2.20. Takeup Post Unit, Supply Post Unit

Fig. DM18-1

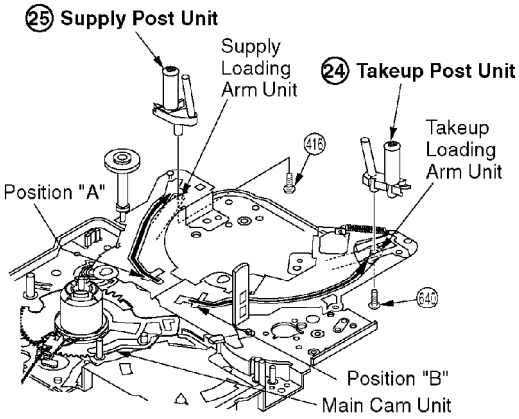

Note:

1. **Removal of the Supply Post Unit and the Takeup Post Unit**

(1) Load the Mechanism to the **Loading Position** to gain access to a Screw 640 and 416 for removal by rotating the Main Cam Unit.
(2) Then, remove a Screw 640 and 416.
(3) Put the arm of the Supply Loading Arm Unit and the Takeup Loading Arm Unit aside.
(4) Slide back the Supply Post Unit and the Takeup Post Unit to Position "A" and "B" and remove.

Fig. DM18-2

Reassembly Note:

1. **Installation of the Supply Post Unit and the Takeup Post Unit**

(1) Confirm that the end of the arm (the threaded hole) of Supply Loading Arm Unit and the end of the arm (the threaded hole) of Takeup Loading Arm Unit are in the end of the guide slots.

(2) Install the Supply Post Unit and the Takeup Post Unit into Position "A" and "B" while being careful of the direction of the Supply Post Unit and the Takeup Post Unit.

(3) Slide the Supply Post Unit and the Takeup Post Unit to the end of guide slots as shown.

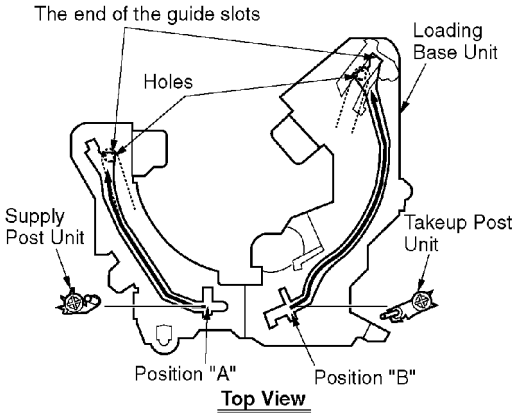

(4) Align the Hole of the Supply Loading Arm Unit with the Threaded Hole of the Supply Post Unit. Do the Same with the Takeup Post Unit.

(5) Tighten a Screw (640) and (416).

Caution:

Be careful of the following when tightening a Screw (640) and (416).

1. Be sure to tighten screws straight.
2. Do not over tighten screws.

2. **Adjustment of the Supply Boat Unit and Takeup Boat Unit**

(1) After replacing, perform the "Tape Interchangeability Adjustment" procedures.

5.2.21. Impedance Roller Unit, Loading Base Unit

Fig. DM19-1

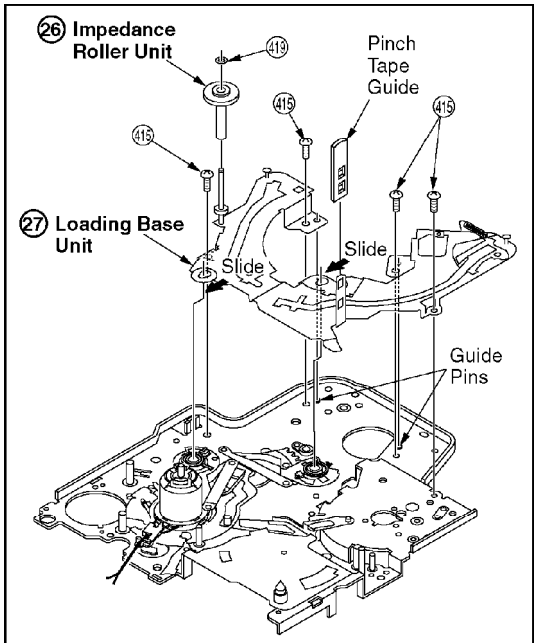

Note:

1. Do not apply excessive pressure to the Impedance Roller Unit.
2. **Removal of the Loading Base Unit**
   Do not apply excessive pressure to the Loading Base Unit so as not to bend.

(1) When removing the Loading Base Unit, remove 4 Screws 415.

(2) Release 2 Guide Pins while lifting up the Loading Base Unit slightly. Then, remove the Loading Base Unit after sliding as indicated by the arrow.

Fig. DM19-2

Reassembly Note:

1. **Installation of the Loading Base Unit**

(1) Before installing the Loading Base Unit, rotate the Main Cam Unit clockwise (to change the gear position from STOP position (Fig. DM20) to Standby position (Fig. DM19-2)) so that Holes A, B, C, and D are Through Holes with holes on the chassis.

(2) Confirm that Portion (a) of Supply Loading Arm Unit and (b) of Takeup Loading Arm Unit are in the position keeping off Thread Holes for 4 Screws (415) as shown. Because the Threaded Holes of the S and T Post are aligned with Hole of the S and T Loading Arm Unit.

(3) Install the Loading Base Unit while sliding.

(4) Tighten 4 Screws (415).

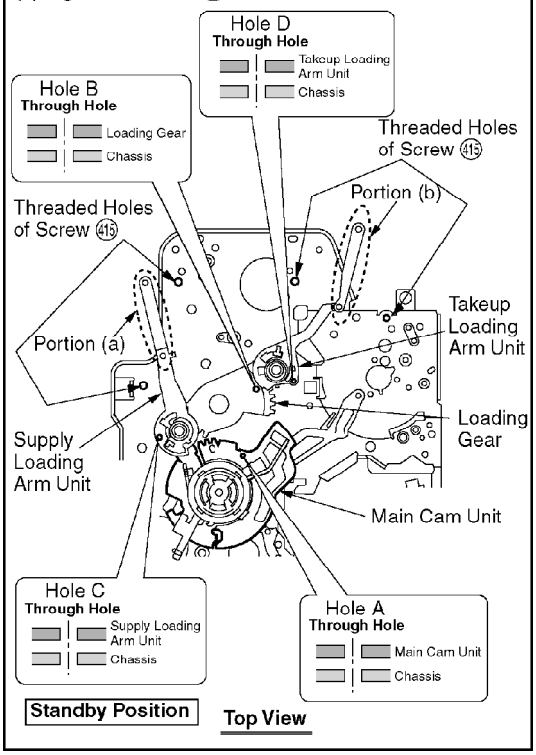

5.2.22. Takeup Loading Arm Unit

Fig. DM20

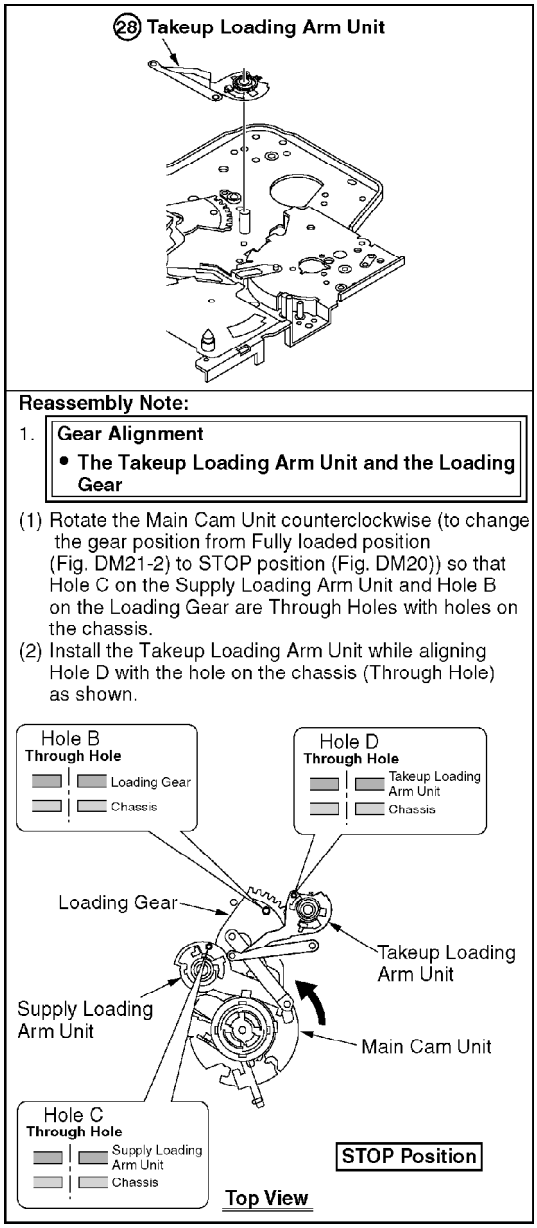

5.2.23. Supply Loading Arm Unit

Fig. DM21-1

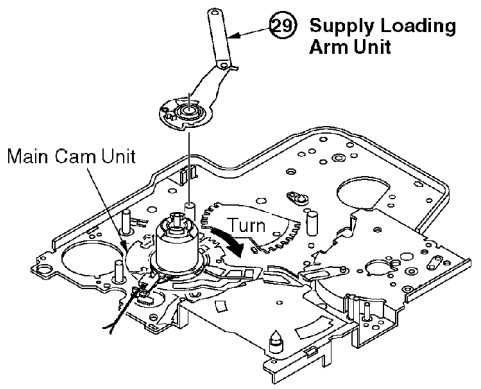

1. **Removal of the Supply Loading Arm Unit**

(1) Remove the Supply Loading Arm Unit after rotating the Main Cam Unit as much as it can.

Fig. DM21-2

Reassembly Note:

1. **Gear Alignments**
   - **The Supply Loading Arm Unit and the Loading Gear**
   - **The Supply Loading Arm Unit and the Main Cam Unit**

(1) Confirm that Hole A on the Main Cam Unit is a Through Hole with a hole on the chassis by rotating the Main Cam Unit clockwise as much as possible. Also, make sure the Loading Gear makes contact with contact point.

(2) Set the Supply Loading Arm Unit so that the last tooth of its lower gear is just outside the last tooth of the Loading Gear as shown.

(3) Turn the Main Cam Unit counterclockwise first ①, then turn Supply Loading Arm Unit clockwise slightly ② so that the last tooth on upper gear of Supply Loading Arm Unit is just outside tooth (a) of Main Cam Unit.

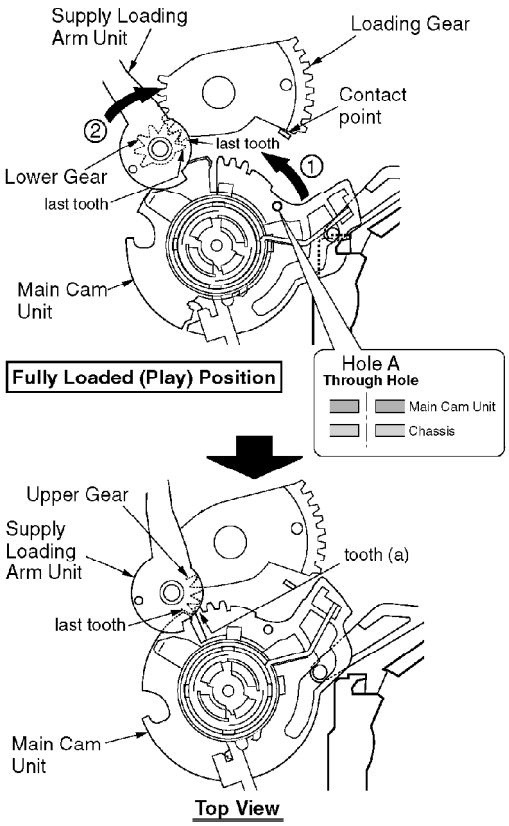

Fig. DM21-3

(4) Confirm that Hole A, B, and C are Through Holes by rotating the Main Cam Unit.

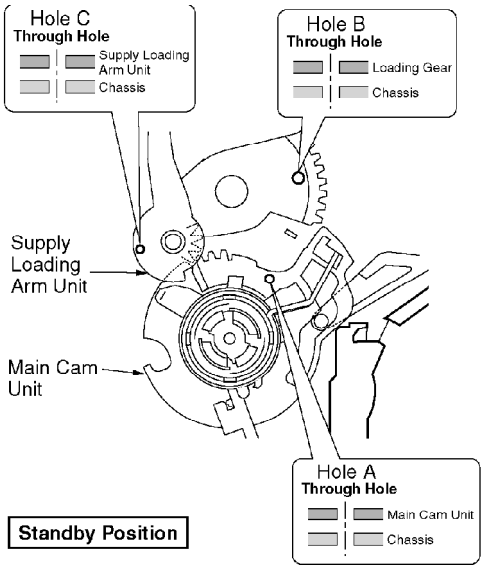

5.2.24. Loading Motor Unit, Main Cam Unit, Pinch Toggle

Fig. DM22

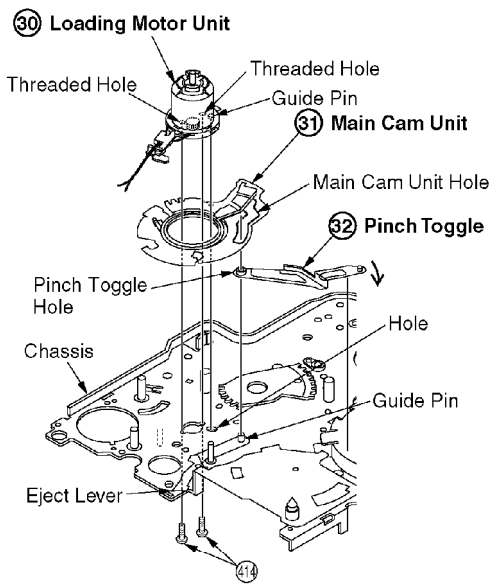

Reassembly Note:

1. Do not pull the Eject Lever upward so as not to bend it.
2. **Installation of the Pinch Toggle and the Main Cam Unit**

(1) Install the Pinch Toggle so that the Pinch Toggle Hole fit over the Guide Pin.
(2) Install the Main Cam Unit so that Guide Pin fits in the Main Cam Unit Hole.

3. **Installation of the Loading Motor Unit**

(1) Install the Loading Motor Unit the Guide Pin fits in Hole on chassis.
(2) Tighten 2 Screws 414. If the 2 Screws 414 can not reach Threaded Holes, push down on the upper side of the Loading Motor Unit to tighten 2 Screws 414.

6. ADJUSTMENT PROCEDURES

6.1. SERVICE FIXTURES & TOOLS

VHS-C Alignment Tape VFMS0004H6C 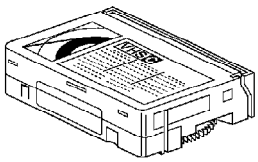	VHS-C Alignment Tape VFMW0001C 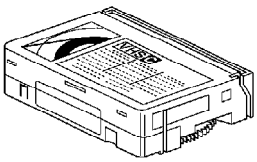	Molytone Grease VFK1024 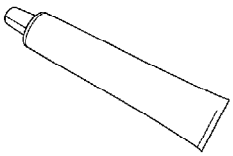
Grease LSUQ0002 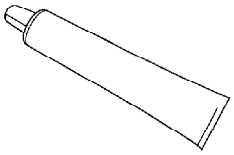	Grease VFKS0081	Lock Screw VHDW0125
Head Cleaning Stick VFK27 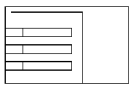	Extension Cable 12P VUVS0007 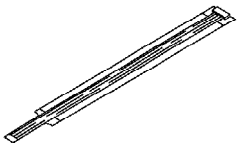	Extension Cable 22P VUVS0012 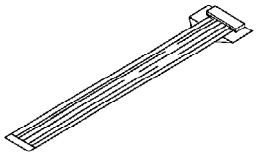
Extension Cable 28P VUVS0015 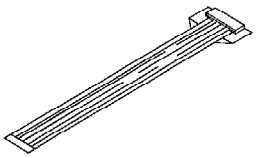	A.W.B. Adjustment Fixture VFKW0066 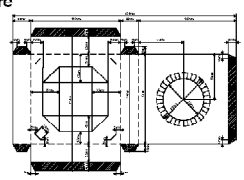	Plier for Non ZIF Connector LSVQ0028
TP Board TP Adjustment Cable 40P LSUP0005A 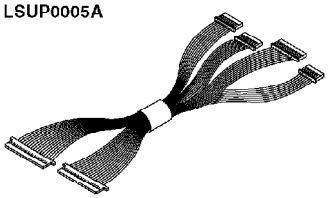	TP Adjustment P.C.B. 40P VFKW0123B 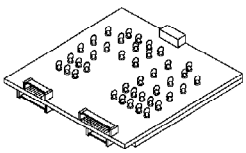	TP Clip 36P LSUP0005C 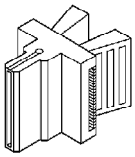

CAAS Kit VFKW1000	
Interface Box VFKW1000A 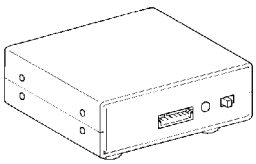	Camera Connecting Cable VFKW1000B 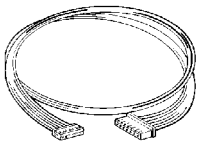
25pin RS-232C Cable VFKW1000D 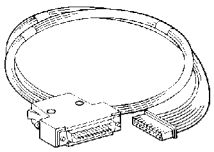	9pin RS-232C Cable VFKW1000C 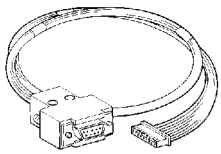

6.2. MECHANICAL ADJUSTMENT

6.2.1. CLEANING PROCEDURE FOR THE UPPER CYLINDER UNIT

1. While slowly turning the Upper Cylinder Unit counterclockwise by hand, gently rub the Video Heads with a Head Cleaning Stick (VFK27) moistened with Isopropyl Alcohol 91 %.

Fig. M1

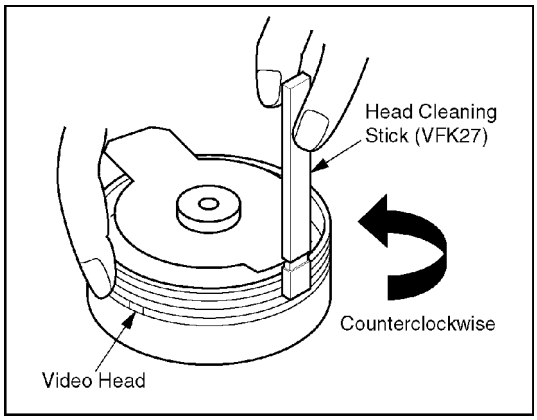

Note:

A. Do not rub vertically or apply excess pressure to the Video Heads.
Do not turn the Upper Cylinder Unit clockwise while cleaning.

B. After cleaning, use a Dry Head Cleaning Stick (VFK27) to remove any Isopropyl Alcohol 91 % remaining on the cylinder tape path. Otherwise, tape damage will occur.

6.2.2. ADJUSTMENT PROCEDURES

6.2.2.1. TAPE INTERCHANGEABILITY ADJUSTMENT

Before perform these Adjustment/Confirmation procedures, be sure to complete following items.

1. Connect the TP Board to S301 on the camcorder. Refer to "HOW TO USE TP BOARD" in "SERVICE NOTES."

Fig. M2-1

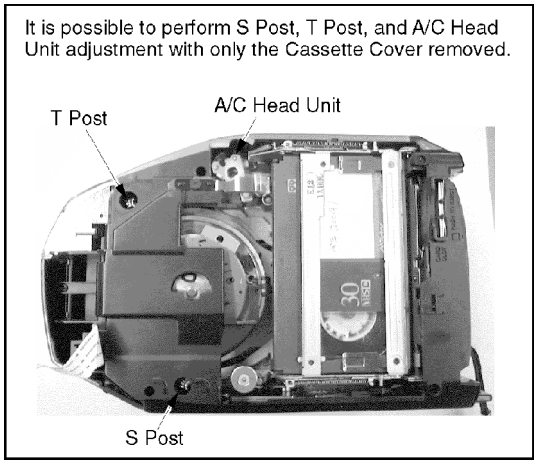

2. **Put the unit into the service mode "I. TRACKING FIX" to defeat Auto Tracking. Refer to "SERVICE MODE SPECIFICATION (SELF-DIAGNOSTIC SYSTEM)" in "SERVICE NOTES."**
3. **Remove the Cassette Lid Cover from the Cassette Tape or the Alignment Tape.**

Fig. M2-2

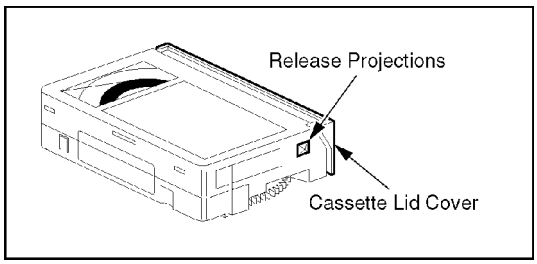

Equipment Required:

Dual Trace Oscilloscope
VHS-C Alignment Tape (VFMS0004H6C)
VHS-C Alignment Tape (VFMW0001C)
Screwdriver Set (Purchase Locally)
TP Board
TP Adjustment Cable 40P (LSUP0005A)
TP Adjustment P.C.B. 40P (VFKW0123B)
TP Clip 36P (LSUP0005C)

6.2.2.1.1. ENVELOPE OUTPUT ADJUSTMENT

The height of the S and T Posts replacement part is preset at the factory.

Purpose:

To achieve a satisfactory picture and secure precise tracking.

Symptom of Misadjustment:

If the envelope is output poorly, much noise will appear in the picture. Then the tracking will lose precision and the playback picture will be distorted by any slight variation of the tracking control circuit.

1. **Put the unit into the service mode "I. Tracking Fix" to defeat Auto Tracking. Refer to "SERVICE MODE SPECIFICATION (SELF-DIAGNOSTIC SYSTEM)" in "SERVICE NOTES."**
2. **Connect the oscilloscope to Pin 32 (Envelope signal) on the TP Adjustment P.C.B. Use Pin 33 (Head Switch signal) as a trigger.**
3. **Play back the VHS-C Alignment Tape (VFMS0004H6C).**
4. **Confirm that the RF envelope is flat enough. If not, with Flat Headed (—) Screwdriver, adjust S and T post height so that the envelope waveform becomes as flat as possible (No envelope drop). If the envelope drop appears on the left-half of the waveform, adjust S post height. If the envelope drop appears on the right-half of the waveform, adjust T post height.**
   CAUTION: Do not apply excessive pressure onto the S and T Posts when adjusting S and T post height.

Fig. M3-1

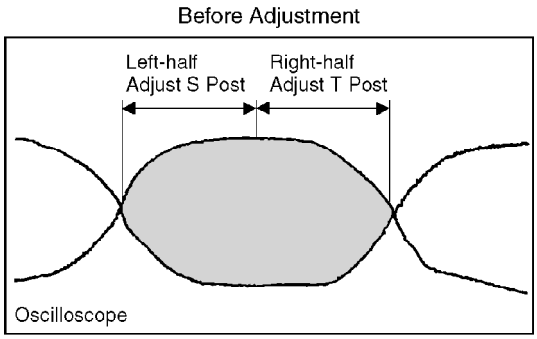

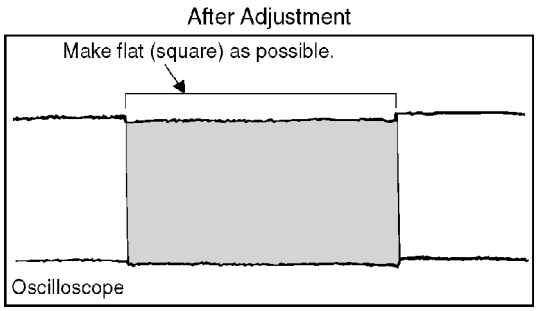

Fig. M3-2

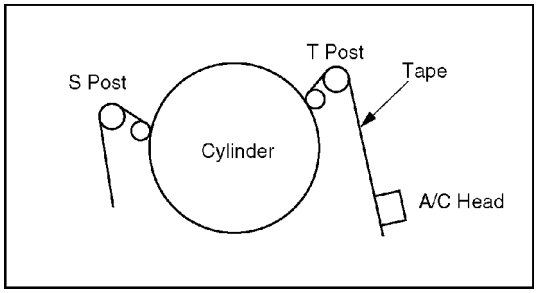

Note:

It will be possible to confirm step 4) after performing the following steps.

A. Exit the "I. TRACKING FIX" mode, then skip the "J. PG SHIFTER" mode to enter other modes (except these 2). Or, close the service mode.

B. Press the Tracking Control Up or Down button on the camcorder. Make sure that the envelope waveform remains flat. If not, readjust S and/or T post heights.

5. After adjustment, confirm that the tape travels without curing at S and T posts.

If curing is apparent, readjust the height of posts.

Fig. M3-3

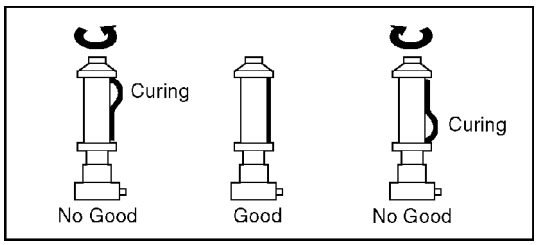

6.2.2.1.2. A/C HEAD HEIGHT ADJUSTMENT

The height of the A/C Head replacement part is preset at the factory.

Purpose:

To be sure the tape runs properly along the Control Head.

Symptom of Misadjustment:

If the control signal is not properly picked up, Servo Operation can not be achieved.

1. Connect the oscilloscope to Pin 25 (PB Control signal) on the TP Adjustment P.C.B.

2. Play back the VHS-C Alignment Tape (VFMW0001C)

3. Confirm that the Sub Control Signal is 500 mV±200 mV. If not,

slightly and equally adjust Screw A, Screw B, and Screw C on the A /C Head Unit to achieve the sub control signal level of 500 mV±200 mV.
(Sub Control Signal level will decrease when rotating screws clockwise, and increase when rotating screws counterclockwise.)

Fig. M4-1

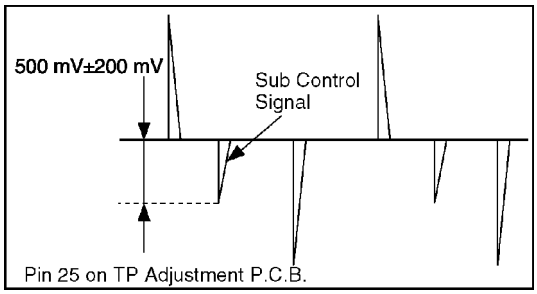

Fig. M4-2

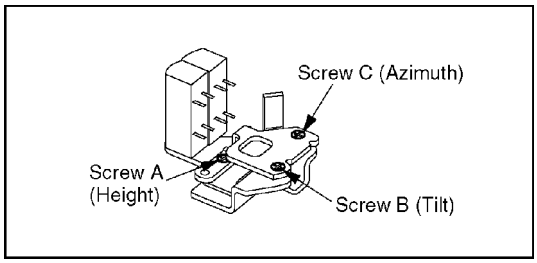

6.2.2.1.3. A/C HEAD AZIMUTH ADJUSTMENT

Purpose:

To adjust the position and height of the A/C Head so that it meets the tape tracks properly.

Symptom of Misadjustment:

If the position of the A/C Head is not properly adjusted, the Audio S /N Ratio will be poor.

1. Connect the Audio/Video Cable on the camcorder.
2. Connect the oscilloscope to audio output jack.
3. Playback the VHS-C Alignment Tape (VFMS0004H6C).
4. Adjust Screw C (Azimuth) on the A/C Head Unit so that the output level is at maximum.

Fig. M5

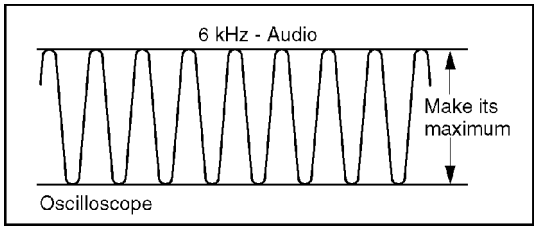

5. Confirm and readjust the A/C Head height.
6. Confirm and readjust Screw C (Azimuth) on the A/C Head so that the output audio becomes is maximum.

6.2.2.1.4. A/C HEAD HORIZONTAL POSITION ADJUSTMENT

Purpose:

To adjust the Horizontal Position of the A/C Head.

Symptom of Misadjustment:

If the Horizontal Position of the A/C Head is not properly adjusted, maximum envelope can not be obtained at the Neutral Position of the Tracking Control Circuit.

1. Put the unit into the service mode "I. TRACKING FIX" to defeat Auto Tracking. Refer to "SERVICE MODE SPECIFICATION (SELF-DIAGNOSTIC SYSTEM)" in "SERVICE NOTES."
2. Connect the oscilloscope to Pin 32 (Envelope signal) on the TP Adjustment P.C.B. Use Pin 33 (Head Switch signal) as a trigger.
3. Play back the VHS-C Alignment Tape (VFMS0004H6C).
4. Set the Screwdriver into the Hole (A) as shown.

Fig. M6-1

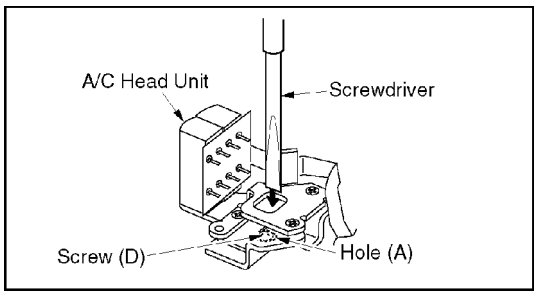

5. Slowly move the A/C Head Unit to the direction "A" or "B" as shown so that the envelope is at maximum.

Fig. M6-2

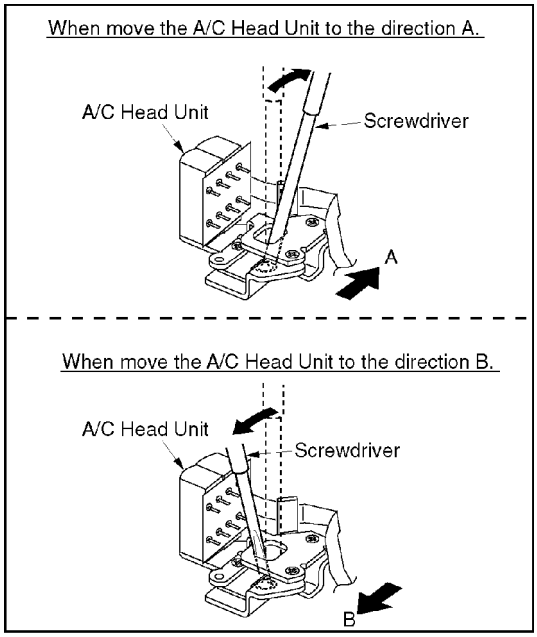

6. To find the center of the maximum period of the envelope, move the A/C Head Unit to confirm the limits on either side of the maximum period.

Note:

It will be possible to confirm step 6) after performing the following steps.

1. Exit the "I. TRACKING FIX" mode, then skip the "J. PG SHIFTER" mode to enter other modes (except these 2). Or, close the service mode.
2. Press the Tracking Control Up Button on the camcorder several times (count the number of times pressed) until the maximum envelope is reduced to 1/2.
3. Press the Tracking Control Down Button on the camcorder several times (count the number of times pressed) until the maximum envelope is reduced to 1/2.
4. If the number of pressing is not the same, readjust A/C Head horizontal position.

6.2.2.1.5. CONFIRMATION OF ENVELOPE OUTPUT

Purpose:

To achieve a satisfactory picture and secure precise tracking.

Symptom of Misadjustment:

If the envelope is output poorly, much noise will appear in the picture. Then the tracking will lose precision and the playback picture will be distorted by any slight variation of the tracking control circuit.

1. **Connect the oscilloscope to Pin 32 (Envelope signal) on the TP Adjustment P.C.B. Use Pin 33 (Head Switch signal) as a trigger.**
2. **Play back the VHS-C Alignment Tape (VFMS0004H6C).**
3. **Confirm that the envelope waveform is as flat as possible (V1/V(max) 0.7).**
   If adjustment is required, adjust S Post and/or T Post with "—" Screwdriver. Refer to "ENVELOPE OUTPUT ADJUSTMENT."

Fig. M7

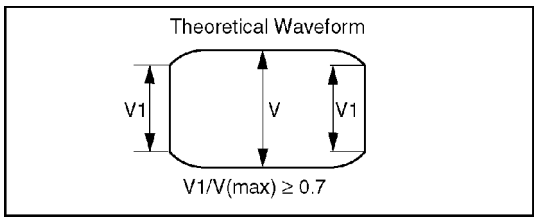

6.3. ELECTRICAL ADJUSTMENT

6.3.1. INITIAL GUIDELINE

The table below shows which adjustments are necessary according to the unit parts and individual parts to be replaced. Make sure to perform these adjustments shown below as necessary.

Adjustment Item \ Replacement Parts		MAIN C.B.A.	IC301(DIGITAL SIGNAL PROCESSOR)	IC306(EEPROM)	IC501(CAMERA/DSC MICROCONTROLLER)	IC309(HALL AMP)	IC602(TIMING SIGNAL GENERATOR)	IC605(SAMPLING HOLD&AGC CONTROL)	IC3001(LUMINANCE/CHROMINANCE SIGNAL PROCESS)	IC3002(TWIN CCD 1H DELAY)	X601	EVF C.B.A	IC901(EVF DRIVE)	COLOR EVF C.B.A	IC901(EVF RGB SIGNAL PROCESS)	LCD C.B.A.	IC9001(RGB SIGNAL PROCESS/LCD PANEL INDICATOR CONTROL)	IC9002(OP. AMP)	CCD C.B.A.	LENS UNIT	EVF UNIT	COLOR EVF UNIT	CYLINDER UNIT
Camera Section	Frequency Adjustment	○					○				○												
	VCO Adjustment	○		○					○														
	Burst/Sync Level Adjustment	○		○					○														
	Hall Amp Adjustment	○	○	○	○	○		○												○			
	Auto Focus Adjustment	○		○																○			
	Gamma Adjustment	○		○				○											○				
	A/D Input Level Adjustment	○		○				○											○				
	Iris PWM Adjustment	○	○	○		○		○											○	○			
	Pedestal Level Adjustment	○	○	○															○				
	YH Level Adjustment	○	○	○				○											○				
	Auto white balance Adjustment	○	○	○				○											○				
VCR Section	Playback Video Level Adjustment	○		○					○														
	Sync Tip Frequency Adjustment	○		○					○														
	Deviation Adjustment	○		○					○														
	Rec Level Adjustment	○		○					○														
	Comb Filter Gain Adjustment	○		○					○	○													
	YNR Adjustment	○		○					○														
	Head Switching Position Adjustment	○		○																			○
	4.8 MHz Trap Adjustment	○																					
Color EVF Section	PLL Adjustment	○		○										○	○							○	
	Pedestal/Contrast Adjustment	○		○										○	○							○	
	RB Sub Pedestal Adjustment	○		○										○	○							○	
	RB Sub Contrast Adjustment	○		○										○	○							○	
	Color Gain Adjustment	○		○										○	○							○	
LCD Section	PLL Adjustment	○		○												○	○						
	Pedestal Level Adjustment	○		○												○	○						
	Contrast Adjustment	○		○												○	○						
	RB Sub Pedestal Adjustment	○		○												○	○						
	RB Sub Contrast Adjustment	○		○												○	○						
	Color Gain Adjustment	○		○												○	○						
	VCOM level Adjustment	○		○												○	○	○					
	Common bias Adjustment	○		○												○	○						

Note: ○ : Adjustment Item

6.3.2. TEST EQUIPMENT

To do all of the Electrical Adjustment, the following equipments are required.

1. Dual-Trace Oscilloscope

Voltage Range: 0.001 to 50 V/Div.

Frequency Range: DC to 50 MHz

Probes: 10:1, 1:1

2. DVM (Digital Volt Meter)

3. Frequency Counter

4. Color TV Monitor

5. VHS-C Alignment Tape (VFMS0004H6C)

6. Vectorscope

7. Plastic Tip Driver

8. Audio Video Cable (VJAW0032)

9. Power Supply for Interface Box.

10. Side L FPC Unit (LSEQ0595)

11. Personal Computer
    PC: IBM PC/AT or compatible
    OS: MS-DOS or MS-Windows
    CPU: 486 or higher
    Drive: 3.5 inch 1.44 MB floppy disk drive
    Port: D-Sub-9-pin Serial or D-Sub-25-pin Serial
    Monitor: VGA Color

12. PC-EVR Adjustment Program (VF0C2002DV10)
    Note:
    Ask latest version when placing order for PC-EVR Adjustment program.

13. CAAS Kit (VFKW1000)
    Interface Box (VFKW1000A)
    Camera Connecting Cable (VFKW1000B)
    9 Pin RS-232C Cable (VFKW1000C)
    25 Pin RS-232C Cable (VFKW1000D)

14. TP Adjustment Cable 40P (LSUP0005A)

15. TP Adjustment P.C.B. 40P (VFKW0123B)

16. TP Clip 36P (LSUP0005C)
    (adjustment equipment with using Infinity Lens)

17. Lighting (Light Box (VFK1164LBX1) is recommended)

18. Infinity Lens (VFK1164TCM02)
    (with Focus Chart)

19. 46 mm Ring (VFK1164TAR46)

20. Gray Scale Chart (VFK1164TFGS2)

21. Color Bar Chart (VFK1164TFCB2)

22. White Chart (VFK1164TFWC2)

23. Color Conversion Filter (VFK1164TFCT2)

(adjustment equipment without using Infinity Lens)

24. Lighting (Halogen Lamp (2000 lux))

25. Reflection Chart
    Reflection Chart Set (VFKS003-N)
    (Reflection Chart Set consists of Gray Scale Chart (VFKS003A), Color Bar Chart (VFKS003B), Registration Chart (VFKS003C), and Resolution Chart (VFKS003D)) Gray Scale Chart (VFKS003A) Color Bar Chart (VFKS003B) Registration Chart (VFKS003C) Resolution Chart (VFKS003D) Color Chip Chart (VFKW0116)

26. Color Temperature Conversion Filter 80A or equivalent Color Temperature Conversion Filter

27. Color Compensating Filter CC05M

28. A.W.B. Adjustment Fixture (VFKW0066)

6.3.3. PREPARATION

1. Connect the Interface Box to the TP Board with Camera Connecting Cable (VFKW1000B).
2. Connect the Interface Box to the Personal Computer with RS-232C Cable (VFKW1000C or VFKW1000D).
3. Connect the TP Board to S301 on the camcorder. Refer to "HOW TO USE TP BOARD" in "SERVICE NOTES."
4. Connect the AC Adaptor and camcorder, and apply DC +6 V to the Interface Box.
5. Power on the camcorder.

Note:

In case that the camcorder is in DEMO mode, release DEMO mode as follows:

Power off the camcorder first. Then, disconnect the TP Board, and power on the camcorder. Then, press the STOP button over 5 seconds.

CAUTION:

1. Do not connect or disconnect any cables while the camcorder is powered on.
2. Before using the TP Board, be sure to clean S301 pattern with

alcohol and confirm that there is no dust in the TP Clip.

3. To achieve the best adjustment results, warm up the camcorder for approx. 30 minutes before adjustment.
4. When removing the TP Clip from S301 on the camcorder, be sure to pinch the grips.

Fig. E1-1

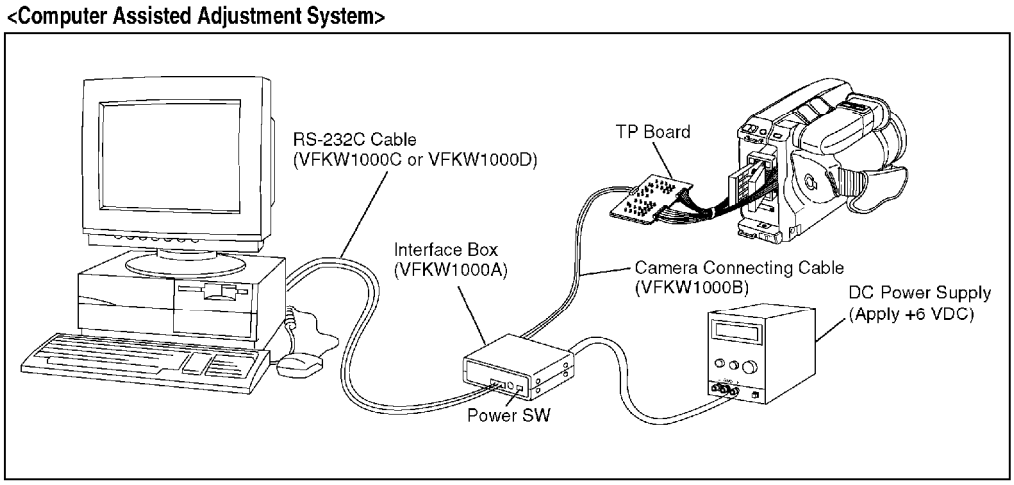

6. Set up the camcorder for adjustment as follows:

Fig. E1-2

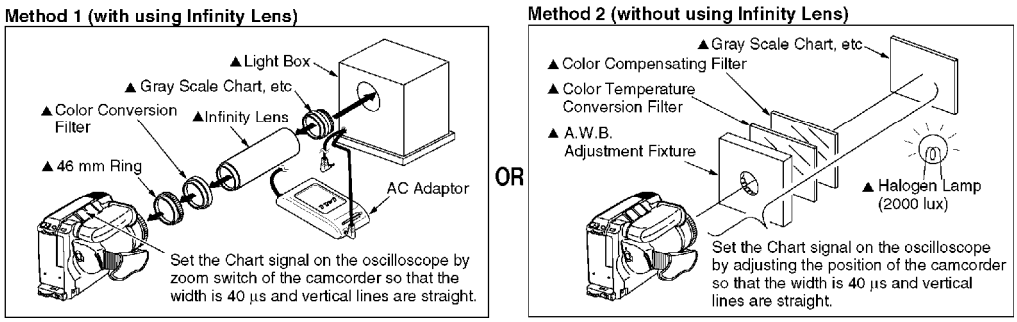

Note: (in Method 1)

1. Connect the 46 mm Ring to the Infinity Lens. Then, insert it into the Light Box.
2. Set the camcorder so that the Decoration Ring of the camcorder is firmly against the 46 mm Ring.
   When performing this operation, ensure that there is no gap between the Decoration Ring and the 46 mm Ring and that no external light can enter.

Fig. E1-3

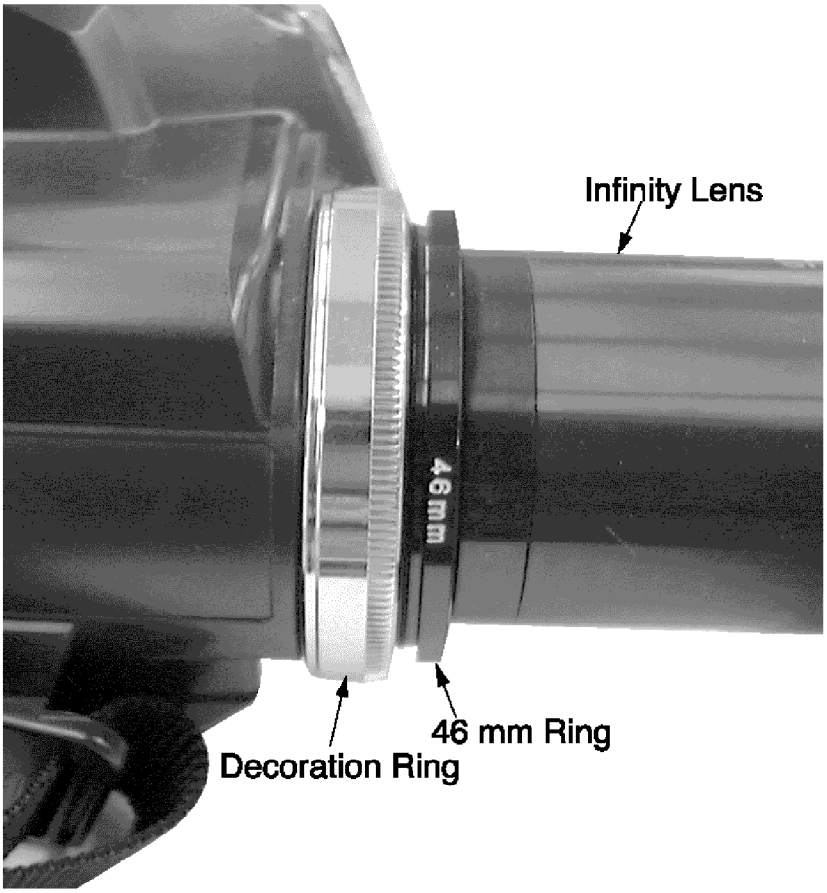
Infinity Lens
46mm
46 mm Ring
Decoration Ring

For necessary equipments marked ▲ in Fig. E1-2, refer to the following table.

Adjustment Item (※ Note: Refer to "Frequency Adjustment")	Necessary equipment	Method 1						Method 2							
		Light Box	Infinity Lens / 46 mm Ring	Focus Chart	Gray Scale Chart	Color Bar Chart	White Chart	Color Conversion Filter	Halogen Lamp	Any Object (High contrast)	Gray Scale Chart	Color Bar Chart	Color Chip Chart	White Chart	Color Temperature Conversion Filter	Color Compensating Filter	A.W.B. Adjustment Fixture
Camera Section	Frequency Adjustment ※	Not used														
	VCO Adjustment															
	Burst/Sync Level Adjustment															
	Hall Amp Adjustment															
	Auto Focus Adjustment (Automatic Adjustment) Note 2	○	○	○					Not available (Note 1)							
	Gamma Adjustment	○	○		○				○		○					
	A/D Input Level Adjustment	○	○		○				○		○					
	Iris PWM Adjustment	○	○		○				○		○					
	Pedestal Level Adjustment	○	○		○				○		○					
	YH Level Adjustment	○	○		○				○		○					
	Auto White Balance Adjustment															
	1 Indoor Preset Adjustment	○	○				○		○					○		
	2 Indoor Input Adjustment	○	○				○		○					○		
	3 Color Phase & R-Y, B-Y Gain Adjustment (Indoor Mode)	○	○			○			○				○			
	4 Outdoor Preset Adjustment	○	○				○	○	○					○	○	○	○
	5 Outdoor Input Adjustment	○	○				○	○	○					○	○	○	○
	6 Color Phase & R-Y, B-Y Gain Adjustment (Outdoor Mode)	○	○			○		○	○				○		○	○	○
VCR Section	Playback Video Level Adjustment	Not used														
	Sync Tip Frequency Adjustment															
	Deviation Adjustment															
	Rec Level Adjustment															
	Comb Filter Gain Adjustment	○	○			○			○			○				
	YNR Adjustment	Not used														
	Head Switching Position Adjustment															
	4.8 MHz Trap Adjustment															
Color EVF Section	PLL Adjustment															
	Pedestal/Contrast Adjustment															
	RB Sub Pedestal Adjustment															
	RB Sub Contrast Adjustment															
	Color Gain Adjustment															
LCD Section	PLL Adjustment															
	Pedestal Level Adjustment															
	Contrast Adjustment															
	RB Sub Pedestal Level Adjustment															
	RB Sub Contrast Level Adjustment															
	Color Gain Adjustment															
	VCOM Level Adjustment															
	Common Bias Adjustment															

Note 1: Auto Focus adjustment (Automatic adjustment) is available only for Method 1.

Note 2: When performing Auto Focus Adjustment (Automatic Adjustment), be sure to perform under low light conditions.
To carry out this adjustment using the Light Box, create low light conditions artificially as follows.
Set the shutter speed to 1/10,000 or 1/4,000 on the menu display and confirm that there is no flicker in the Focus Chart image at the selected shutter speed.

6.3.4. SET UP OF PC-EVR ADJUSTMENT PROGRAM

1. Turn on the Personal Computer.
MS-Windows will be set up automatically.

2. Restart it in MS-DOS mode.

3. Change the current directory to the one including the PC-EVR Adjustment Program and start up the PC-EVR Adjustment Program as follows.

A. If MS-DOS is Japanese mode, input "us," and then press "ENTER" key to be US mode on.

Fig.E2-1

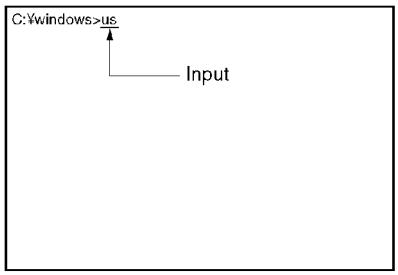

B. Input "cd \ ,*****" and then press "ENTER" key to change the directory to the one including the PC-EVR Adjustment Program.

Fig.E2-2

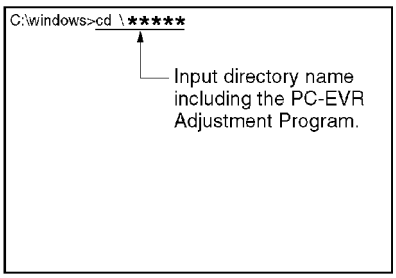

C. Input "kc2002," and then press "ENTER" key to start up the PC-EVR Adjustment Program.

Fig.E2-3

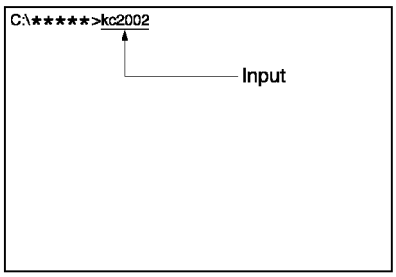

"Select Model Number Menu" will be displayed.

4. Select the model number which you are servicing, and then press "Enter" key. The starting display will be displayed.
5. Perform set up items according to menu until "Main Menu" is displayed.
6. Select "Sub Menu" to adjust or check, etc. the camcorder.

6.3.5. HOW TO USE MAIN MENU

6.3.5.1. Main Menu

Select "Sub Menu" by pressing ↑ ↓ (UP/DOWN) key in Main Menu. Then, adjust or check the camcorder according to the menu. Then, press "ENTER" key. "Sub Menu" will be displayed.

Note:

Menu 5 through 8 are needed for adjustment.

Fig. E3-1

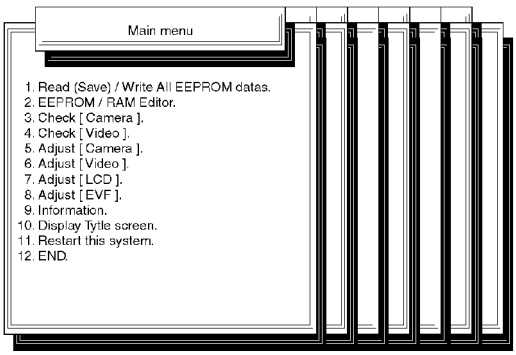

Also, by pressing ← → key, "Sub Menu" can be seen in order below.

Fig. E3-2

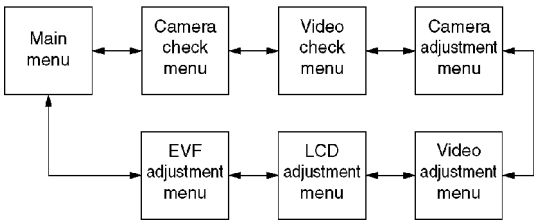

Note:

The adjusted data is stored to EEPROM IC after each adjustment.

6.3.6. FREQUENCY ADJUSTMENT

6.3.6.1. CAMERA SECTION

Purpose:

To set the chroma subcarrier.

Symptom of Misadjustment:

The picture will have no color. (The burst shifts)

Test Point :

TP601 (Main C.B.A.)

Adjustment :

C619, C620 (Main C.B.A.)

Specification :

14.31797 MHz ~ 14.31839 MHz
(For model with Photo Shot)
9.53482 MHz ~ 9.53510 MHz

(For model without Photo Shot)

Input :

Mode :

Equipment :

Frequency counter

Adjustment Procedure:

1. Perform in Service Position to gain access to C619 and C620 (PT) on the Main C.B.A. (foil side).
2. Connect the Frequency counter to TP601 on the Main C.B.A.
   (For model with Photo Shot)
   A. If the frequency is under 14.31797 MHz, be sure to remove the Capacitor C619 on the Main C.B.A.
      Then, confirm the frequency is between 14.31797 MHz and 14.31839 MHz.
   B. If the frequency is over 14.31839 MHz, install a Capacitor (a widely used capacitor: ECUV1H010CCV) to C620 on the Main C.B.A.
      Then, confirm the frequency is between 14.31797 MHz and 14.31839 MHz.
   (For model without Photo Shot)
   A. If the frequency is under 9.53482 MHz, be sure to remove the Capacitor C619 on the Main C.B.A.
      Then, confirm the frequency is between 9.53482 MHz and 9.53510 MHz.
   B. If the frequency is over 9.53510 MHz, install a Capacitor (a widely used capacitor: ECUV1H010CCV) to C620 on the Main C.B.A.
      Then, confirm the frequency is between 9.53482 MHz and 9.53510 MHz.

Fig. E4

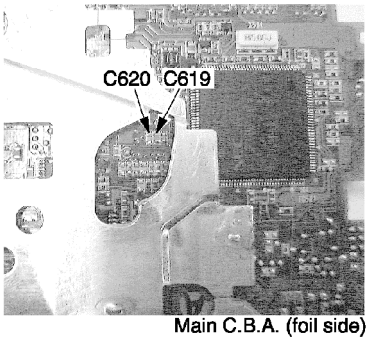

Main C.B.A. (foil side)

6.3.7. TEST POINTS AND CONTROL LOCATION

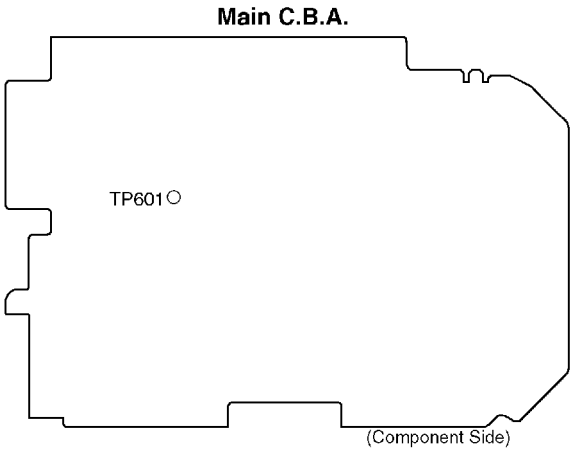

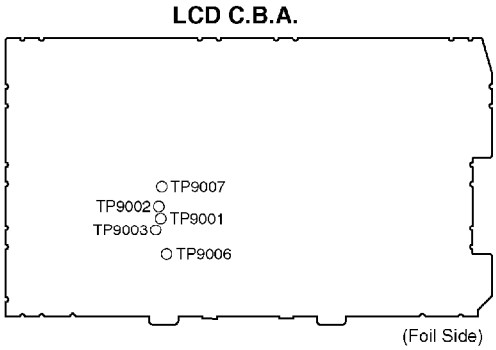

Test Point Information

○ Test Point with no Test Pin.

7. SCHEMATIC DIAGRAMS

7.1. SCHEMATIC DIAGRAM & CIRCUIT BOARD LAYOUT NOTES

7.2. MAIN SCHEMATIC DIAGRAMS

7.3. LCD SCHEMATIC DIAGRAMS

7.4. COLOR EVF SCHEMATIC DIAGRAM (Model: PV-L652)

7.5. HEAD AMP SCHEMATIC DIAGRAM

7.6. LCD SHAFT UNIT / CCD UNIT / EVF UNIT (Model: PV-L452) SCHEMATIC DIAGRAMS

7.7. TOP OPERATION UNIT / SIDE L FPC UNIT / MECHANISM FPC UNIT SCHEMATIC DIAGRAMS

7.8. MIC UNIT / BATTERY CATCHER UNIT SCHEMATIC DIAGRAMS

7.9. INTERCONNECTION SCHEMATIC DIAGRAM

7.10. SIGNAL WAVEFORMS

8. CIRCUIT BOARD LAYOUT

8.1. MAIN C.B.A.

8.2. COLOR EVF C.B.A. (Model: PV-L652)

8.3. LCD C.B.A.

8.4. MECHANISM FPC UNIT

9. BLOCK DIAGRAMS

10. EXPLODED VIEWS

10.1. MAIN PARTS SECTION

❶ MAIN PARTS SECTION

Note:
1. Parts with no Ref. No. in "EXPLODED VIEW" are not supplied. And some Ref. No. will be skipped. Be sure to make your orders of replacement parts according to the parts list.
2. The parts indicated by the dotted line ⬚ are for Ass'y only and are not supplied.

COMPARISON CHART OF MODELS & MARKS

MODEL	MARK
PV-L452	A
PV-L652	B

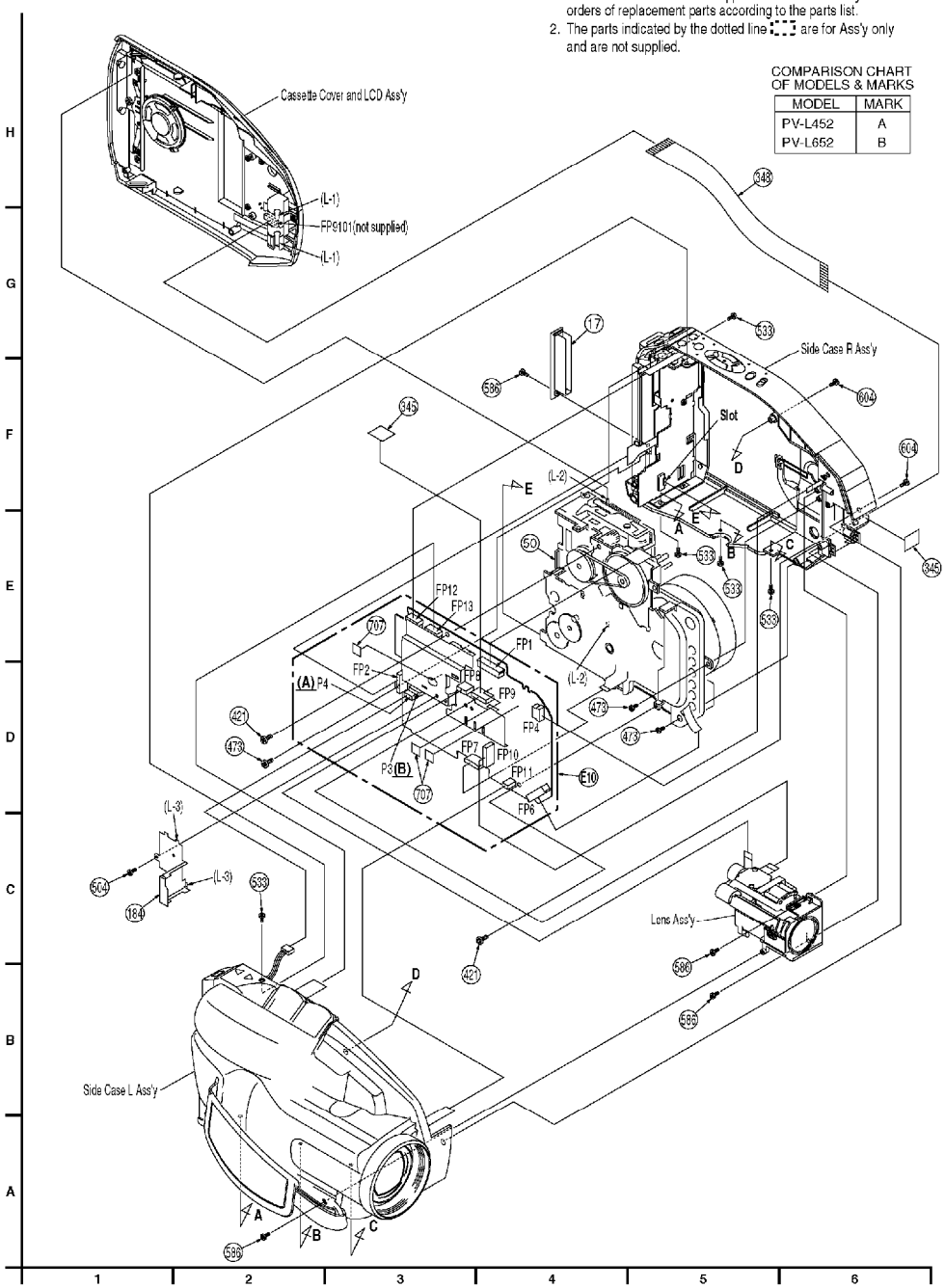

10.2. CASSETTE COVER AND LCD SECTION

❷ CASSETTE COVER AND LCD SECTION

IMPORTANT SAFETY NOTICE:

COMPONENTS IDENTIFIED BY THE SIGN ⚠ HAVE SPECIAL CHARACTERISTICS IMPORTANT FOR SAFETY. WHEN REPLACING ANY OF THESE COMPONENTS, USE ONLY THE SPECIFIED PARTS.

COMPARISON CHART OF MODELS & MARKS

MODEL	MARK
PV-L452	A
PV-L652	B

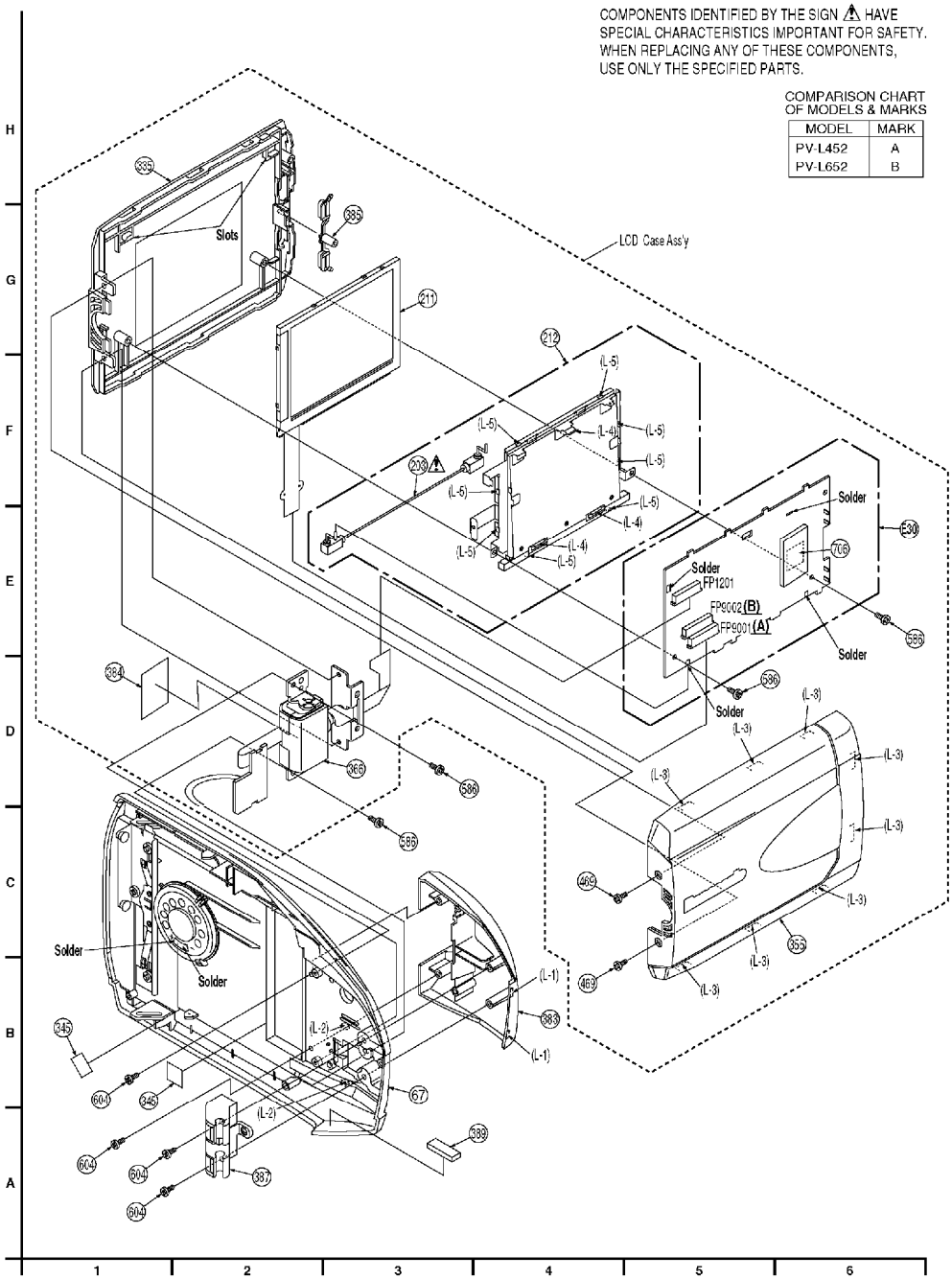

10.3. SIDE CASE L SECTION

❸ SIDE CASE L SECTION

IMPORTANT SAFETY NOTICE:

COMPONENTS IDENTIFIED BY THE SIGN ⚠ HAVE SPECIAL CHARACTERISTICS IMPORTANT FOR SAFETY. WHEN REPLACING ANY OF THESE COMPONENTS, USE ONLY THE SPECIFIED PARTS.

COMPARISON CHART OF MODELS & MARKS

MODEL	MARK
PV-L452	A
PV-L652	B

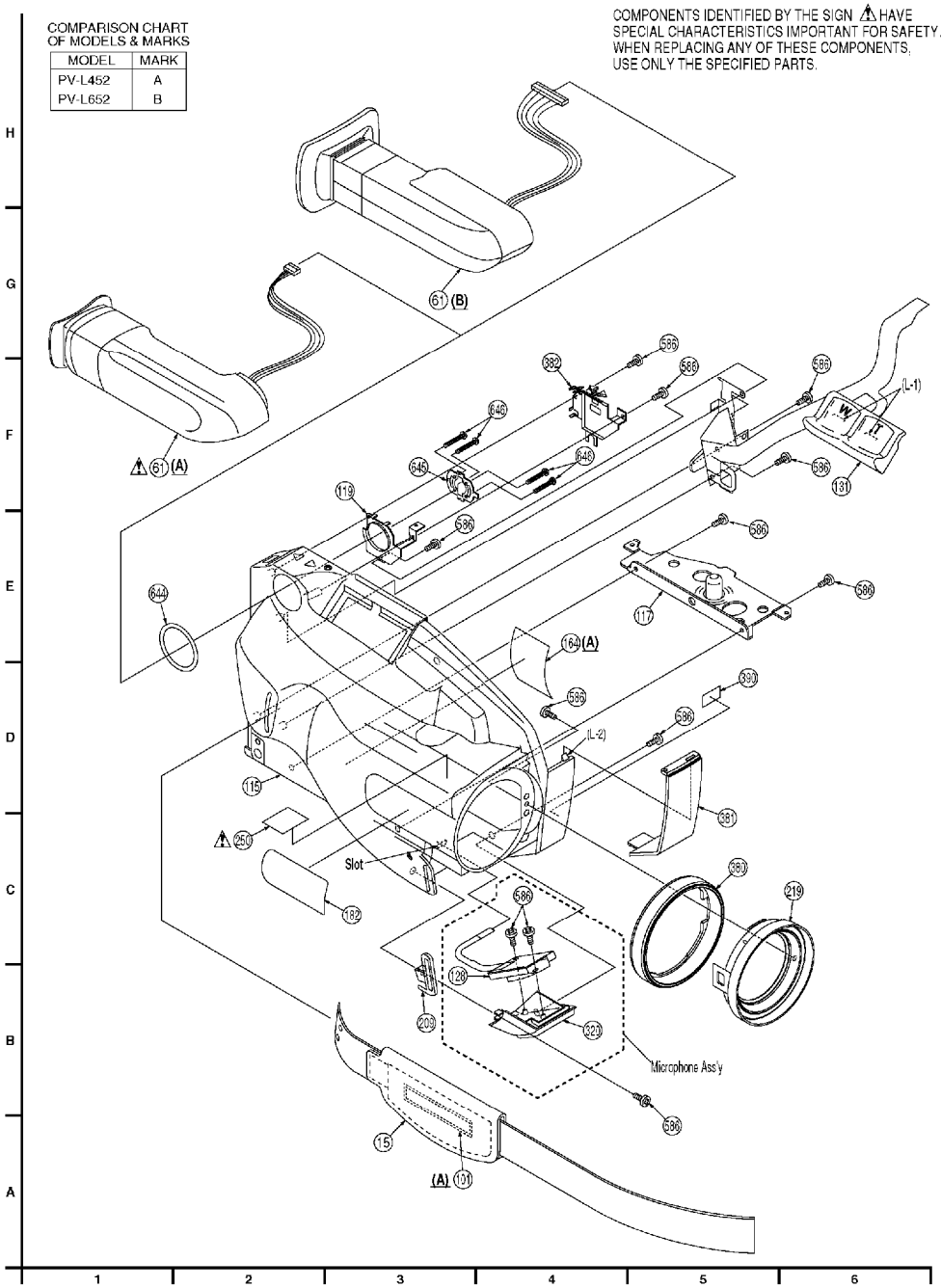

10.4. COLOR EVF SECTION

(Model: PV-L652)

❹ COLOR EVF SECTION
(Model: B)

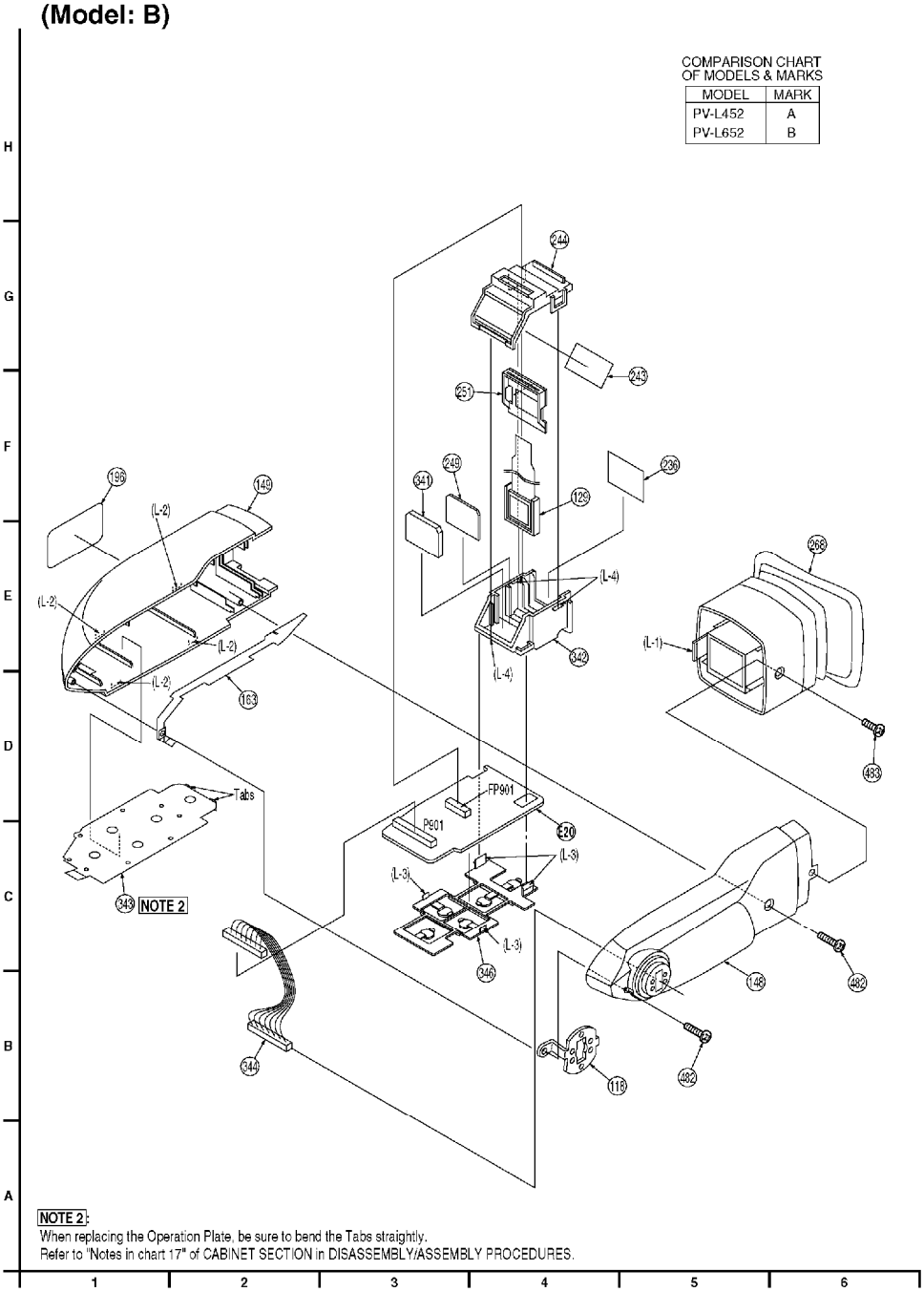

10.5. LENS SECTION

❺ LENS SECTION

LUBRICATION POINTS
When the marked parts are replaced, apply the recommended lubricants or adhesive for better maintenance of the unit.

Mark	Kind of Lubricant	Availability	Part Number
□□□	Grease	Available from Factory	LSUQ0002

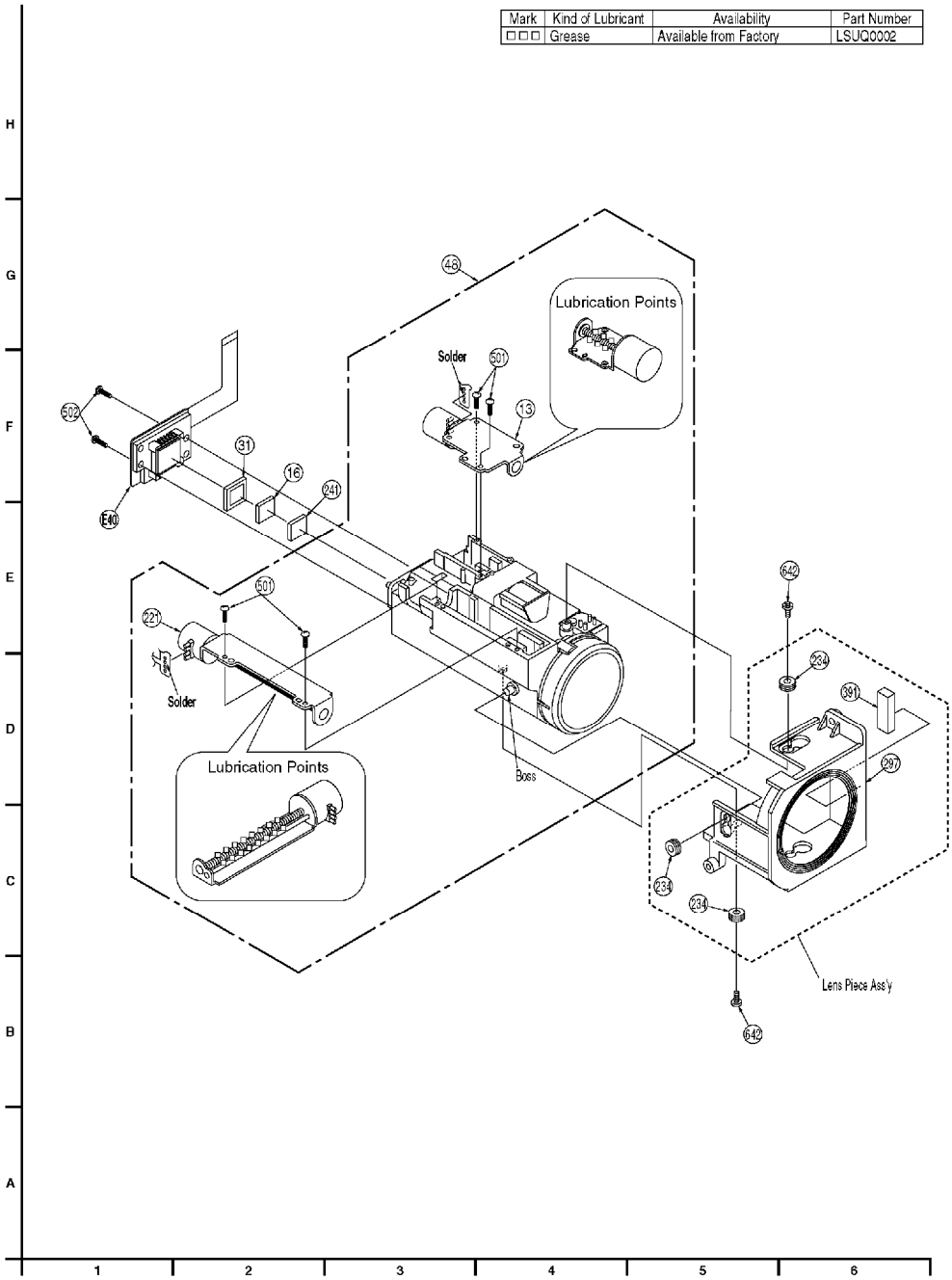

10.6. SIDE CASE R SECTION

❻ SIDE CASE R SECTION

IMPORTANT SAFETY NOTICE:
COMPONENTS IDENTIFIED BY THE SIGN ⚠ HAVE SPECIAL CHARACTERISTICS IMPORTANT FOR SAFETY. WHEN REPLACING ANY OF THESE COMPONENTS, USE ONLY THE SPECIFIED PARTS.

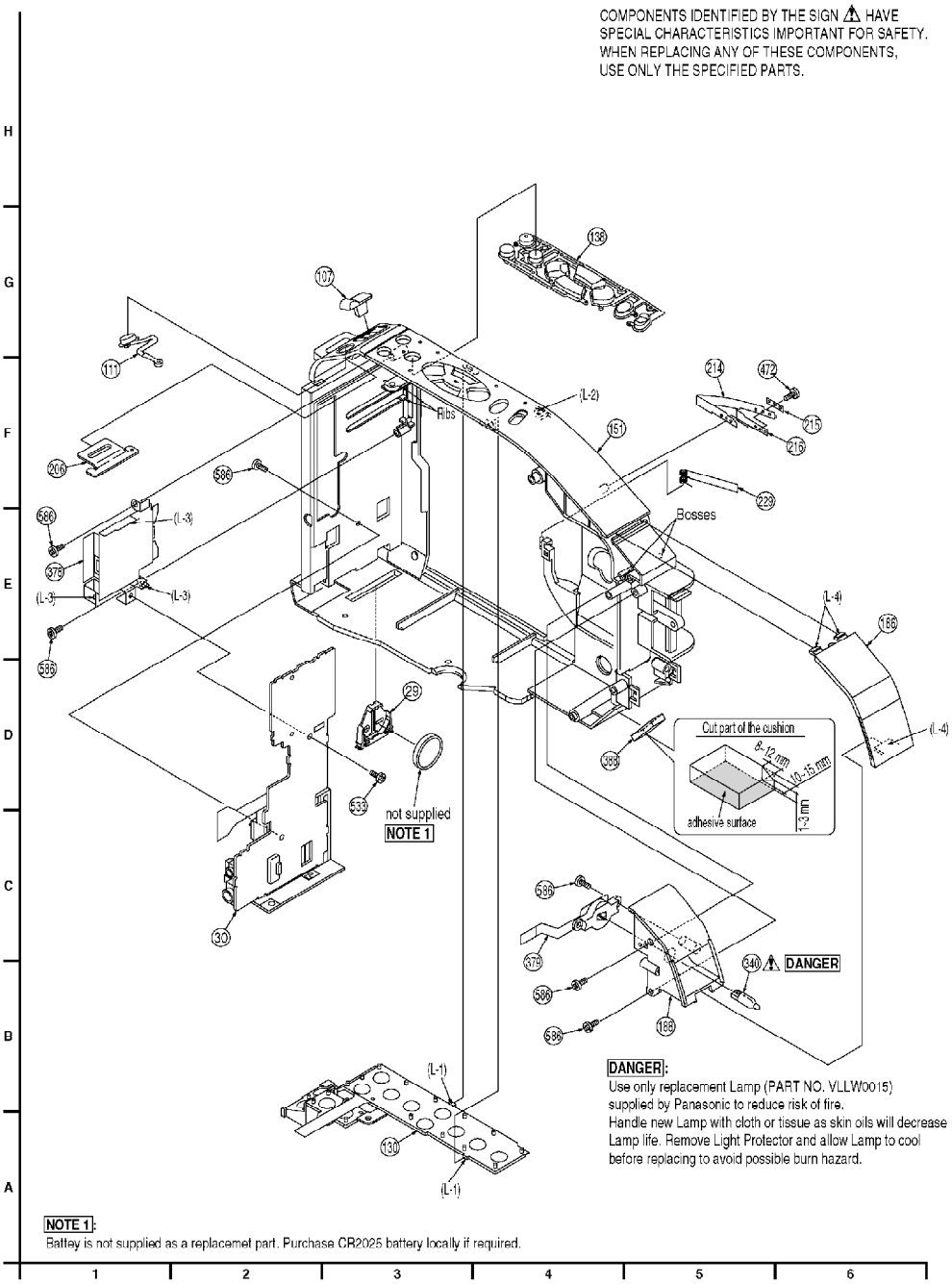

DANGER:
Use only replacement Lamp (PART NO. VLLW0015) supplied by Panasonic to reduce risk of fire.
Handle new Lamp with cloth or tissue as skin oils will decrease Lamp life. Remove Light Protector and allow Lamp to cool before replacing to avoid possible burn hazard.

NOTE 1:
Battey is not supplied as a replacemet part. Purchase CR2025 battery locally if required.

10.7. VCR MECHANISM SECTION

❼ VCR MECHANISM SECTION

LUBRICATION POINTS
When the marked parts are replaced, apply the recommended lubricants or adhesive for better maintenance of the unit.

Mark	Kind of Lubricant	Availability	Part Number
×××	Molytone Grease	Available from Factory	VFK1024
△△△	Grease	Available from Factory	VFKS0081

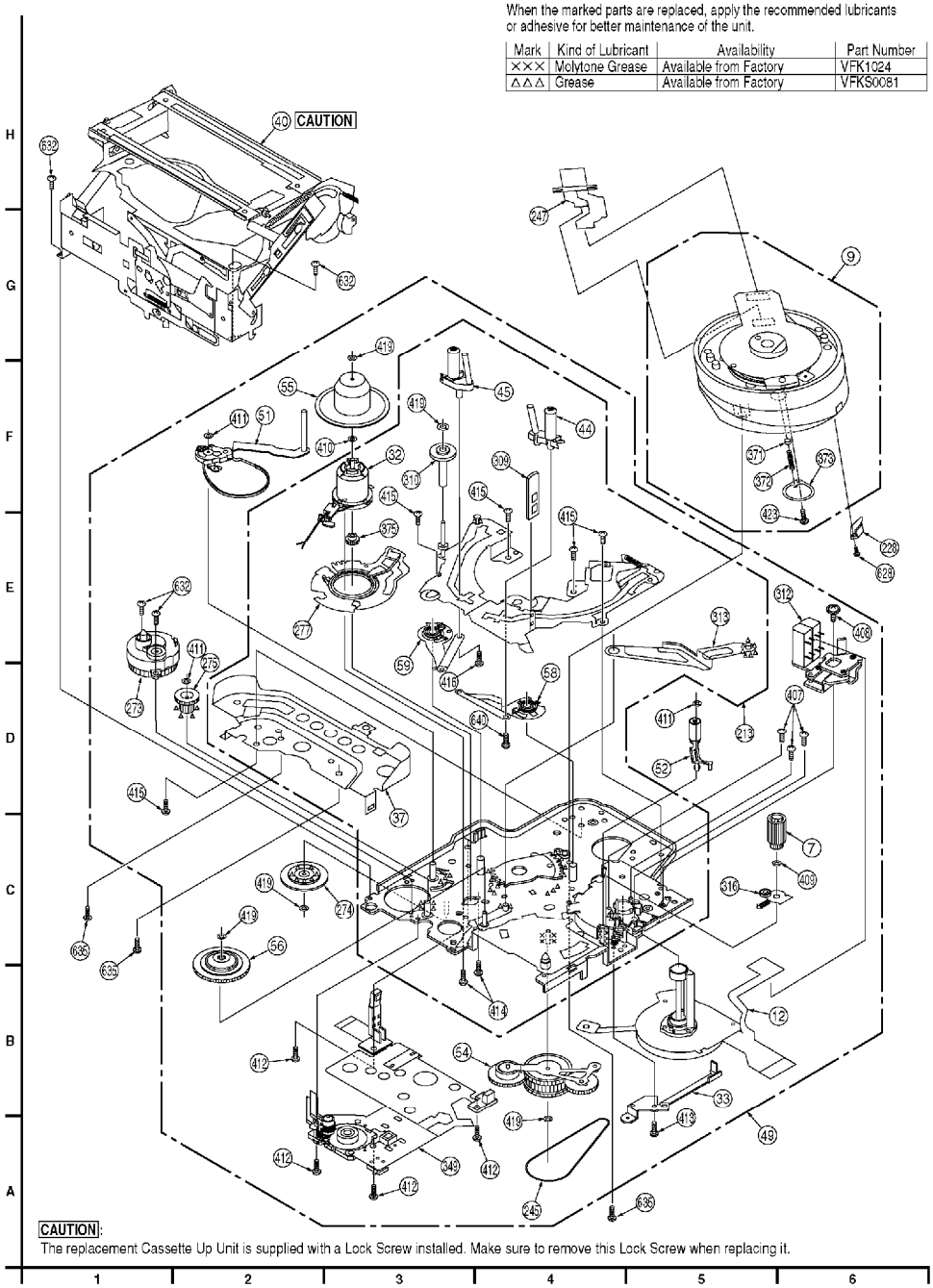

10.8. PACKING PARTS AND ACCESSORIES SECTION

❽ PACKING PARTS AND ACCESSORIES SECTION

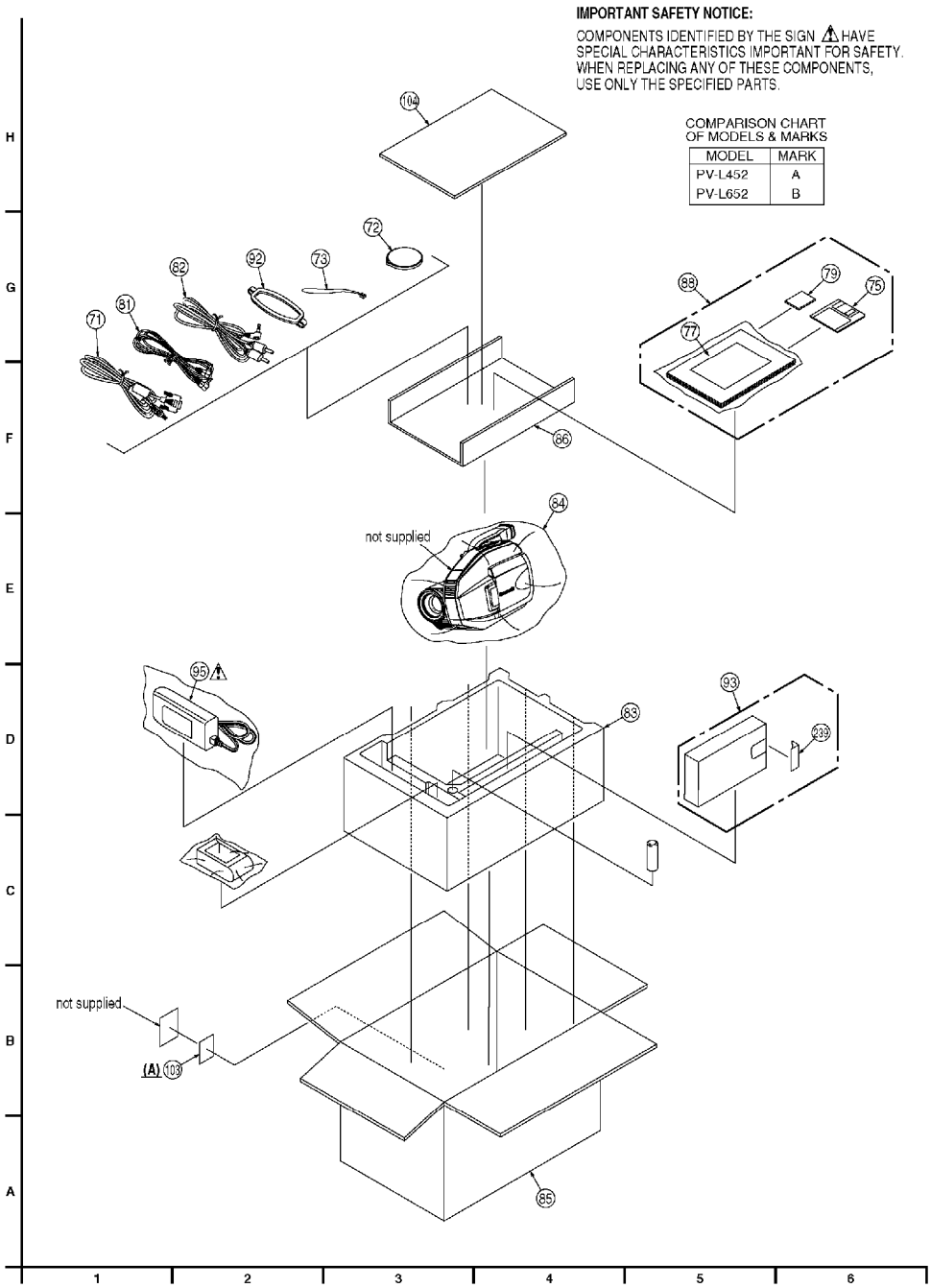

11. REPLACEMENT PARTS LISTS

BEFORE REPLACING PARTS, READ THE FOLLOWING:

11.1. REPLACEMENT NOTES

11.1.1. General Notes

1. Use only original replacement parts:

To maintain original function and reliability of repaired units, use

only original replacement parts which are listed with their part numbers in the parts list.

2. IMPORTANT SAFETY NOTICE
   Components identified by the sign ⚠ have special characteristics important for safety. When replacing any of these components, use only the specified parts.
3. SPECIAL NOTE
   All integrated circuits and many other semiconductor devices are electrostatically sensitive and therefore require the special handling techniques described under the "ELECTROSTATICALLY SENSITIVE (ES) DEVICES" section of this service manual.
4. Parts with no Ref. No. in "EXPLODED VIEWS" are not supplied. And some Ref. No. will be skipped. Be sure to make your orders of replacement parts according to the parts list.
5. Parts different in shape or size may be used. However, only interchangeable parts will be supplied as service replacement parts.
6. Parts with mark "VED" in the Remarks column are supplied from VED. Others are supplied from MKI.
7. Item numbers with capital letter E (Example: E10, E20,...) in the Ref. No. column are shown in the exploded views.
8. Parts whose Ref. Nos. are the same are interchangeable as replacement parts. Any of these parts may be ordered and used as a replacement part.

11.1.2. Mechanical Replacement Notes

1. Section No. of parts shown in Exploded Views are indicated in the Remarks column.
2. Abbreviation
   RTL: Retention Time Limited
   This indicates that the retention time is limited for this item. After the discontinuation of this item in production, it will no longer be available.
3. Cut Washers (Ref No. 409, 411, and 419) are not reusable. If

removed, install a new one.

4. After replacing Mechanism Chassis Ass'y (Ref. No. 49) or Mechanism Chassis Sub Ass'y (Ref. No. 213), perform the Tape Interchangeability Adjustment procedures. Refer to "TAPE INTERCHANGEABILITY ADJUSTMENT" in MECHANICAL ADJUSTMENT.
5. Lamp (Ref No. 340) replacement note:
   DANGER: Use only replacement Lamp (PART NO. VLLW0015) supplied by Panasonic to reduce risk of fire. Handle new Lamp with cloth or tissue as skin oils will decrease Lamp life. Remove Light Protector and allow Lamp to cool before replacing to avoid possible burn hazard.
6. Operation Plate (Ref No. 343) replacement note:
   When replacing the Operation Plate, be sure to bend the Tabs straightly. Refer to "Disassembly Method" of CABINET SECTION in DISASSEMBLY/ASSEMBLY PROCEDURES.

11.1.3. Electrical Replacement Notes

1. Unless otherwise specified;
   All resistors are in Ω, K = 1,000 Ω, M = 1,000 kΩ.
2. Abbreviation
   RTL: Retention Time Limited
   This indicates that the retention time is limited for this item. After the discontinuation of this item in production, it will no longer be available.
   NR: Non Repairable Board Ass'y
   MGF CHIP: Metal Glaze Film Chip
   C CHIP: Ceramic Chip
   COMPLX CMP: Complex Component
   W FLMPRF: Wirewound Flameproof
   C.B.A.: Circuit Board Assembly
   P.C.B.: Printed Circuit Board
   E.S.D.: Electrostatically Sensitive Devices
3. SERVICE OF CHIP PARTS
   When servicing chip parts, please use a soldering iron of less than

30 W.

4. When replacing 0 Ω resistor, a wire can be substituted for it.
5. IC306 replacement note:
   When replacing this IC, be sure to write the initial data with PC-EVR Adjustment Program.
6. IC501 and IC6001 replacement note:
   IC501 and IC6001 are supplied together only as a Microcontroller Kit (LSUC0005). Microcontroller Kit consists of IC6001, IC501, and Instruction Sheet.
   When replacing either IC6001 or IC501, be sure to replace both IC6001 and IC501. When R6001 is found on the Main C.B.A., be sure to remove it at the same time.
   Otherwise, normal operation may not be possible.

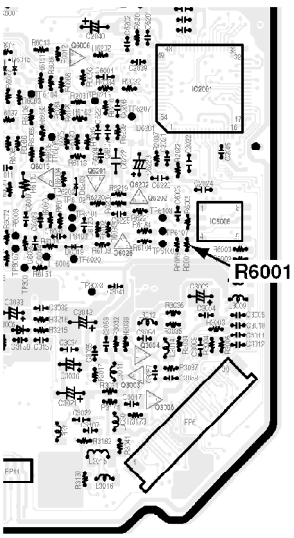

Main C.B.A. (component side)

COMPARISON CHART OF MODELS & MARKS

MODEL	MARK
PV-L452	A
PV-L652	B

11.2. MECHANICAL REPLACEMENT PARTS LIST

COMPARISON CHART OF MODELS & MARKS

MODEL	MARK
PV-L452	A
PV-L652	B

MECHANICAL REPLACEMENT PARTS

Ref. No.	Part No.	Part Name & Description	Remarks
7	VDGW0072	TAKE GEAR	7
9	LSEG0004	CYLINDER UNIT	7
9	VEGS0438	CYLINDER UNIT	7
12	VEMS0337	CAPSTAN UNIT	7
13	LSEM0049	FOCUS MOTOR UNIT	5
15	LSGQ0031	HAND STRAP	3
16	LSFL0107	OPTICAL FILTER	5
17	LSKF0408	EVR COVER	1
29	LSMD0264	BACKUP COVER	6
30	LSEP8141A1	BATTERY CATCHER UNIT NR	6
31	LSMG0095	CCD CUSHION	5
32	VEMW0087	LOADING MOTOR UNIT,5W	7
33	VMAW0745	P.C.B. ANGLE	7
37	VMAW0744	MECHANISM SUPPORT ANGLE	7
40	VXYS1369	CASSETTE UP UNIT	7
44	VXDW0196	TAKEUP POST UNIT	7
45	VXDW0187	SUPPLY POST UNIT	7
48	LSXN0022	LENS UNIT	5
49	LSXY0345	MECHANISM CHASSIS ASS'Y	7 RTL
50	LSXY0339	VCR MECHANISM CHASSIS ASS'Y	1 RTL
51	VXLW0080	TENSION UNIT	7
52	LSXL0075	PINCH ARM ASS'Y	7
54	VXLS1108	IDLER ARM UNIT	7
55	VXPW0025	REEL TABLE UNIT	7
56	VXPW0024	REV CLUTCH	7
58	VXLW0078	TAKEUP LOADING ARM UNIT	7
59	VXLW0077	SUPPLY LOADING ARM UNIT	7
61	LSYK0787	ELECTRONIC VIEWFINDER UNIT (A)	3 ⚠
61	LSYK0816	COLOR ELECTRONIC VIEWFINDER UNIT (B)	3
67	LSYK0793	CASSETTE COVER UNIT	2
71	LSJA0276	PC CONNECTION CABLE W/PLUG	8
72	LSYK0817	LENS CAP UNIT	8
73	LSGQ0049	LENS CAP STRAP	8
75	LSFT0490	DRIVER SOFTWARE FD	8
77	LSQT0529C	INSTRUCTION BOOK	8
79	RP-SD008BMK0	SD CARD	8
79	RP-SD008MMK0	SD CARD	8
81	LSJA0391	DC CORD W/PLUG	8
82	LSJA0390	AUDIO/VIDEO CABLE W/PLUG	8
83	LSPN0263	CUSHION,STYROFORM	8
84	VPFW0049	BAG,POLYETHYLENE	8
85	LSPG1271	PACKING CASE,PAPER (A)	8
85	LSPG1272	PACKING CASE,PAPER (B)	8
86	LSPN0264	CUSHION COVER	8
88	LSQF0529	FAN BAG	8
92	LSFC0012	SHOULDER STRAP	8
93	VYMW0009	CASSETTE ADAPTOR	8
95	PV-A19-A	AC ADAPTOR UNIT	8 ⚠
101	N9ZZ00000027	SECURITY TAG (A)	3
103	CPS-1C	CHECK POINT LABEL (A)	8
104	LSPG1300	PAD	8
107	LSGT0049	EJECT KNOB	6
111	LSGU0238	DISPLAY BUTTON	6

Ref. No.	Part No.	Part Name & Description	Remarks
115	LSKM0742	SIDE CASE L,ABS RESIN	3
117	LSMA0552	TRIPOD FRAME	3
118	LSMA0559	EVF PLATE,STEEL (B)	4
119	LSMA0550	EVF ANGLE	3
128	LSXM0020	MICROPHONE UNIT NR	3
129	ALP022AXX10	LCD PANEL (B)	4
130	LSEQ0635	TOP OPERATION UNIT	6
131	LSEQ0633	SIDE L FLEXIBLE PRINTED CIRCUIT UNIT	3
138	LSGU0235	TOP BUTTON	6
148	LSKM0708	EVF CASE A,ABS RESIN (B)	4
149	LSKM0709	EVF CASE B,ABS RESIN (B)	4
151	LSKM0732	SIDE CASE R,ABS RESIN	6
163	LSSC0525	EVF ESD PLATE,STEEL (B)	4
164	LSQL1019	CAUTION LABEL (A)	3
182	LSQL1254	LENS LABEL (A)	3
182	LSQL1262	LENS LABEL (B)	3
184	LSSC0524	SENSOR SHIELD CASE,STEEL	1
186	LSGF0047	LIGHT PROTECTOR	6
188	LSMR0007	LIGHT REFLECTOR	6
196	VQLW1735	EVF LABEL (B)	4
203	LSXY0205	LAMP UNIT	2 ⚠
206	LSMA0473	S-ANGLE A	6
209	LSMA0549	GRIP ANGLE	3
211	LSXY0321	LIQUID CRYSTAL DISPLAY PANEL UNIT (A)	2
211	LSXY0322	LIQUID CRYSTAL DISPLAY PANEL UNIT (B)	2
212	LSXY0324	LEAD LIGHT PANEL UNIT	2
213	LSXY0305	MECHANISM CHASIS SUB ASS'Y	7
214	LSMZ0213	TAPE GUIDE	6
215	LSMZ0210	GUIDE COVER	6
216	LSMZ0214	PROTECTOR	6
219	LSYK0814	LENS RING UNIT	3
221	LSEM0048	ZOOM MOTOR UNIT	5
228	VMDW0357	BULGE CHIP	7
229	LSMB0248	TAPE GUIDE SPRING	6
234	LSMT0045	LENS RUBBER	5
236	LSDL0132	PROTECT PLATE,PLASTIC (B)	4
239	VKFS1021	BATTERY COMPARMENT LID	8
241	LSFL0106	INFRARED CUT FILTER	5
243	LSDL0131	REFLECTION PLATE,STEEL (B)	4
244	LSMD0275	EVF PROTECT A (B)	4
245	VDVW0003	CAPSTAN BELT	7
247	LSJB8147	CYLINDER CABLE W/OUT PLUG, 7V	7
249	LSFL0073	LED DIFFUSION PLATE,STEEL (B)	4
250	LSQL1018	LIGHT CAUTION LABEL	3 ⚠
251	LSMD0289	EVF LCD HOLDER (B)	4
268	LSYK0820	EYE CAP UNIT (B)	4
273	VXYW0195	REDUCTION GEAR UNIT	7
274	VDGW0063	REDUCTION GEAR A	7
275	LSDG0139	REDUCTION GEAR B	7
277	VXYW0194	MAIN CAM UNIT	7
297	LSMD0315	LENS PIECE	5
309	VMDW0486	PINCH TAPE GUIDE	7
310	VXJW0095	IMPEDANCE ROLLER UNIT	7

Ref. No.	Part No.	Part Name & Description	Remarks
312	VEHS0588	AUDIO CONTROL HEAD UNIT	7
313	VMLW0083	PINCH TOGGLE	7
316	LSXL0083	REV BRAKE ARM UNIT	7
320	LSYK0821	MICROPHONE CASE UNIT,ABS RESIN	3
335	LSKM0701	LCD CASE B,ABS RESIN (A)	2
335	LSKM0712	LCD CASE B,ABS RESIN (B)	2
340	VLLW0015	LAMP	6 ⚠
341	LSFL0072	LED LENS (B)	4
342	LSMD0276	EVF PROTECT B (B)	4
343	LSSC0418	OPERATION PLATE,STEEL (B)	4
344	LSEK0396	EVF CONNECTOR UNIT (B)	4
345	LSMF0057	SHEET,NYLON-RAYON	1,2
346	LSMD0280	P.C.B. HOLDER (B)	4
348	LSJW0031	FLEXIBLE FLAT CABLE W/OUT PLUG,15V,-15V	1
349	LSEQ0540	MECHANISM FLEXIBLE PRINTED CIRCUIT UNIT	7
355	LSYK0803	LCD CASE A UNIT,ABS RESIN	2
366	LSXA0428	LCD SHAFT UNIT	2
371	LSSA0002	EARTH CONTACT	7
372	LSMB0168	CONTACT SPRING	7
373	LSMA0336	CONTACT PLATE,STEINLESS	7
375	VDGW0059	MOTOR GEAR	7
378	LSSC0517	SD ESD PALTE,STEEL	6
379	LSEP8149A1	LAMP SOCKET UNIT NR	6
380	LSGK0085	DECORATION RING	3
381	LSGP0308	FRONT PIECE (A)	3
381	LSGP0309	FRONT PIECE (B)	3
382	LSGU0245	UP DOWN BUTTON	3
383	LSKM0704	SHAFT COVER (A)	2
383	LSKM0738	SHAFT COVER (B)	2
384	LSQL1257	FCC ID LABEL	2
385	LSGU0244	BRIGHT BUTTON	2
387	LSMD0314	COVER HINGE	2
388	LSMT0367	CUSHION A,RUBBER	6
389	LSMT0368	CUSHION B,RUBBER	2
390	LSMX0160	SPACER	3
391	LSMT0369	CUSHION,RUBBER	5
407	XQN16+A32	SCREW,STEEL	7
408	VHDW0124	SCREW W/WASHER,STEEL	7
409	VMXW0217	CUT WASHER,STEEL	7
410	XWGV15Z32G	POLY SLIDER WASHER	7
411	VMXW0213	CUT WASHER,STEEL	7
412	XQN2+B35	SCREW,STEEL	7
413	XQN2+A22	SCREW,STEEL	7
414	XQN14+A32	SCREW,STEEL	7
415	XQN2+B22	SCREW,STEEL	7
416	XQN14+BJ25FZ	SCREW,STEEL	7
419	VMX2026	CUT WASHER,STEEL	7
421	XQN16+BF4FN	SCREW,STEEL	1
423	XQN16+B3FN	SCREW,STEEL	7
469	XQN2+BF4FXK	SCREW,STEEL	2
472	VHDW0102	SCREW,STEEL	6
473	VHDW0100	SCREW,STEEL	1
482	XQN2+CJ12FXK	SCREW,STEEL (B)	4
483	XQN2+BJ4FXK	SCREW,STEEL (B)	4

Ref. No.	Part No.	Part Name & Description	Remarks
501	XQN16+CJ5FY	SCREW,STEEL	5
502	XQN16+CJ6	SCREW,STEEL	5
504	XQN2+CF3	SCREW,STEEL	1
533	XQN2+BF5FXK	SCREW,STEEL	1,6
586	XQN2+BJ5FXK	SCREW,STEEL	1,2,3,6
604	XQN2+BJ8FXK	SCREW,STEEL	1,2
628	XQN16+B3FU	SCREW,STEEL	7
632	XQN14+B3	SCREW,STEEL	7
635	XQN16+C5FU	SCREW,STEEL	7
640	LSHD0054	SCREW,STEEL	7
642	LSHD0071	SCREW,STEEL	5
644	LSHD0077	SCREW,STEEL	3
645	LSMC0113	SPRING WASHER,STAINLESS	3
646	LSMX0154	WASHER,NYLON	3
706	VMZW0668	INSULATION SHEET,PLASTIC	2
707	VMTS0035	CUSHION,RUBBER	1
E10	LSEP8140A1	MAIN C.B.A. (A)	1 RTL
E10	LSEP8140B1	MAIN C.B.A. (B)	1 RTL
E20	LSEP8113B1	COLOR ELECTRONIC VIEWFINDER C.B.A. (B)	4 RTL
E30	LSEP8143A1	LIQUID CRYSTAL DISPLAY C.B.A. (A)	2 RTL
E30	LSEP8143B1	LIQUID CRYSTAL DISPLAY C.B.A. (B)	2 RTL
E40	LSEQ0621	CCD C.B.A. NR	5

SERVICE FIXTURES AND TOOLS

Ref. No.	Part No.	Part Name & Description	Remarks
	VFKS002	LIGHT BOX W/CHARTS SET	
	VFKS002A	GLAY SCALE CHART	
	VFKS002B	COLOR BAR CHART	
	VFKS002C	REGISTRATION CHART	
	VFKS002D	RESOLUTION CHART	
	VFKS002Y	LIGHT BOX	
	VFKS003-N	REFLECTION CHART SET	
	VFKS003A	GLAY SCALE CHART	
	VFKS003B	COLOR BAR CHART	
	VFKS003C	REGISTRATION CHART	
	VFKS003D	RESOLUTION CHART	
	VFK1164TFWC2	WHITE CHART	VED
	VFK1164TFGS2	GRAY SCALE CHART	VED
	VFK1164TFCB2	COLOR BAR CHART	VED
	VFK1164TFCT2	CONVERSION FILTER (C-14)	VED
	VFK1164LBX1	LIGHT BOX	VED
	VFK1164TCM02	INFINITY LENS (WITH FOCUS CHART)	VED
	VFK1164TLA01	LAMP	VED
	VFK1164TAR58	ATTACHMENT RING (58mm)	VED
	VFK1164TAR55	ATTACHMENT RING (55mm)	VED
	VFK1164TAR52	ATTACHMENT RING (52mm)	VED
	VFK1164TAR49	ATTACHMENT RING (49mm)	VED
	VFK1164TAR46	ATTACHMENT RING (46mm)	
	VFK1164TAR43	ATTACHMENT RING (43mm)	VED
	VFK1164TAR37	ATTACHMENT RING (37mm)	VED
	VFK1164TAR3A	ATTACHMENT RING (30.5mm)	VED
	VFK1164TAR27	ATTACHMENT RING (27mm)	VED

Ref. No.	Part No.	Part Name & Description	Remarks
	VFMS0004H6C	VHS-C ALIGNMENT TAPE	
	VFMW0001C	VHS-C ALIGNMENT TAPE	
	VFK27	HEAD CLEANING STICK	
	VFKS0081	GREASE	
	LSUQ0002	GREASE	
	VFK1024	MOLYTONE GREASE	
	VUVS0007	EXTENSION CABLE 12P	
	VUVS0012	EXTENSION CABLE 22P	
	VUVS0015	EXTENSION CABLE 28P	
	LSUP0005A	TP ADJUSTMENT CABLE 40P	
	VFKW0123B	TP ADJUSTMENT PCB 40P	
	LSUP0005C	TP CLIP 36P	
	VFKW0066	A.W.B. ADJUSTMENT FIXTURE	
	VFKW0116	COLOR CHIP CHART	
	VFKW1000	CAAS KIT	
	VFKW1000A	INTERFACE BOX	
	VFKW1000B	CAMERA CONNECTING CABLE	
	VFKW1000C	9PIN RS-232C CABLE	
	VFKW1000D	25PIN RS-232C CABLE	
	VHDW0125	LOCK SCREW	
	LSVQ0028	PLIER FOR NON ZIF CONNECTOR	

11.3. ELECTRICAL REPLACEMENT PARTS LIST

COMPARISON CHART OF MODELS & MARKS

MODEL	MARK
PV-L452	A
PV-L652	B

PRINTED CIRCUIT BOARD ASSEMBLY

Ref. No.	Part No.	Part Name & Description	Remarks
E10	LSEP8140A1	MAIN C.B.A. (A)	E.S.D. RTL
E10	LSEP8140B1	MAIN C.B.A. (B)	E.S.D. RTL
E20	LSEP8113B1	COLOR ELECTRONIC VIEWFINDER C.B.A. (B)	E.S.D. RTL
E30	LSEP8143A1	LIQUID CRYSTAL DISPLAY C.B.A. (A)	RTL
E30	LSEP8143B1	LIQUID CRYSTAL DISPLAY C.B.A. (B)	RTL
E40	LSEQ0621	CCD C.B.A. NR	E.S.D.

11.3.1. MAIN C.B.A.

COMPARISON CHART OF MODELS & MARKS

MODEL	MARK
PV-L452	A
PV-L652	B

INTEGRATED CIRCUITS

Ref. No.	Part No.	Part Name & Description	Remarks
IC301	MN673241	IC, LOGIC	E.S.D.
IC306	C3EBEG000034	IC, 4K EEP ROM	E.S.D.
IC309	C0ABCZ000008	IC, LINEAR	
IC501	LSUC0005	MICROCONTROLLER KIT *See Replacement Note	E.S.D.
IC505	C0DBEFB00001	IC, LINEAR	
IC602	MN5293-1	IC, CMOS GATE ARRAYS	E.S.D.
IC603	MN3112SA-E1	IC, CMOS STANDARD LOGIC	E.S.D.
IC605	AN2109NFHQ	IC, LINEAR	
IC701	LB1837MLTEL3	IC, LINEAR	
IC701	LB1837M-TE-L	IC, LINEAR	
IC701	LB1837MTEL3	IC, LINEAR	
IC702	LB1837MLTEL3	IC, LINEAR	
IC702	LB1837M-TE-L	IC, LINEAR	
IC702	LB1837MTEL3	IC, LINEAR	
IC1001	C0DBCMC00003	IC, LINEAR	
IC2001	AN3897FH-V	IC, LINEAR	
IC2002	UNA022400L	IC, LINEAR	
IC2003	UNA022400L	IC, LINEAR	
IC3001	AN2401NFH	IC, LINEAR	
IC3002	MN38663S-E1	IC, LOGIC	E.S.D.
IC4001	AN12998A-V	IC, LINEAR	
IC6001	LSUC0005	MICROCONTROLLER KIT *See Replacement Note	E.S.D.
IC6002	PST3439UR	IC, CMOS STANDARD LOGIC	E.S.D.
IC6002	R3111Q391ATR	IC, LINEAR	
IC6002	S80839ANNPT2	IC, LINEAR	E.S.D.
IC6002	XC61CN3902NR	IC, LINEAR	
IC6005	C1ZBZ0001476	IC, PERIPHERAL MCU	E.S.D.
IC6006	C0CBACE00012	IC, PERIPHERAL MCU	E.S.D.
IC6007	C0GBG0000029	IC, LINEAR	
IC6203	CNB10010RL	TAKEUP REEL SENSOR	

TRANSISTORS

Ref. No.	Part No.	Part Name & Description	Remarks
Q301	2SD1819A0L	TRANSISTOR SI NPN CHIP	
Q301	B1ABCF000020	TRANSISTOR SI NPN CHIP	
Q302	2SC4215-0TL	TRANSISTOR SI NPN CHIP	
Q302	2SC4215-YTL	TRANSISTOR SI NPN CHIP	
Q303	2SD1819A0L	TRANSISTOR SI NPN CHIP	
Q303	B1ABCF000020	TRANSISTOR SI NPN CHIP	
Q305	2SD1819A0L	TRANSISTOR SI NPN CHIP	
Q305	B1ABCF000020	TRANSISTOR SI NPN CHIP	
Q306	2SB1218A0L	TRANSISTOR SI PNP CHIP	
Q306	B1ADCF000063	TRANSISTOR SI PNP CHIP	
Q307	2SB1218A0L	TRANSISTOR SI PNP CHIP	
Q307	B1ADCF000063	TRANSISTOR SI PNP CHIP	
Q308	2SD132800L	TRANSISTOR SI NPN CHIP	
Q308	2SD2436	TRANSISTOR SI NPN CHIP	
Q310	2SD1819A0L	TRANSISTOR SI NPN CHIP	
Q310	B1ABCF000020	TRANSISTOR SI NPN CHIP	
Q311	2SD1819A0L	TRANSISTOR SI NPN CHIP	
Q311	B1ABCF000020	TRANSISTOR SI NPN CHIP	
Q610	2SC4215-0TL	TRANSISTOR SI NPN CHIP	
Q610	2SC4215-YTL	TRANSISTOR SI NPN CHIP	
Q611	2SC4215-0TL	TRANSISTOR SI NPN CHIP	
Q611	2SC4215-YTL	TRANSISTOR SI NPN CHIP	
Q617	UNR521500L	TRANSISTOR SI NPN CHIP	
Q617	B1GBCFJA0006	TRANSISTOR SI NPN CHIP	
Q703	UNR521100L	TRANSISTOR SI NPN CHIP	
Q703	B1GBCFJJ0007	TRANSISTOR SI PNP CHIP	
Q1001	UNR511100L	TRANSISTOR SI PNP CHIP	
Q1001	B1GDCFJJ0008	TRANSISTOR SI PNP CHIP	
Q1002	UNR511300L	TRANSISTOR SI PNP CHIP	
Q1002	B1GDCFNN0007	TRANSISTOR SI PNP CHIP	
Q1003	UNR511500L	TRANSISTOR SI PNP CHIP	
Q1003	B1GDCFJJ0025	TRANSISTOR SI PNP CHIP	
Q1005	2SA201000L	TRANSISTOR SI PNP CHIP	
Q1005	B1ADPB000001	TRANSISTOR SI PNP CHIP	
Q1006	2SA204600L	TRANSISTOR SI PNP CHIP	
Q1006	B1ADMD000009	TRANSISTOR SI PNP CHIP	
Q1007	2SA204600L	TRANSISTOR SI PNP CHIP	
Q1007	B1ADMD000009	TRANSISTOR SI PNP CHIP	
Q1008	2SA204600L	TRANSISTOR SI PNP CHIP	
Q1008	B1ADMD000009	TRANSISTOR SI PNP CHIP	
Q1009	2SA204600L	TRANSISTOR SI PNP CHIP	
Q1009	B1ADMD000009	TRANSISTOR SI PNP CHIP	
Q1010	2SB1218A0L	TRANSISTOR SI PNP CHIP	
Q1010	B1ADCF000063	TRANSISTOR SI PNP CHIP	
Q1011	XP0450100L	TRANSISTOR SI NPN CHIP	
Q1011	B1HBCFA00001	TRANSISTOR COMPLX CMP SI NPN CHIP	
Q1011	B1HBCFA00010	TRANSISTOR COMPLX CMP SI NPN CHIP	
Q1011	B1HBCFA00011	TRANSISTOR COMPLX CMP SI NPN CHIP	
Q1013	2SA204600L	TRANSISTOR SI PNP CHIP	
Q1013	B1ADMD000009	TRANSISTOR SI PNP CHIP	
Q1015	B1ABCF000098	TRANSISTOR SI NPN CHIP	
Q1015	B1ABCF000099	TRANSISTOR SI NPN CHIP	
Q1016	2SD1819A0L	TRANSISTOR SI NPN CHIP	
Q1016	B1ABCF000020	TRANSISTOR SI NPN CHIP	

Ref. No.	Part No.	Part Name & Description	Remarks
Q1017	2SD1819A0L	TRANSISTOR SI NPN CHIP	
Q1017	B1ABCF000020	TRANSISTOR SI NPN CHIP	
Q1018	2SB1218A0L	TRANSISTOR SI PNP CHIP	
Q1018	B1ADCF000063	TRANSISTOR SI PNP CHIP	
Q1019	2SB1218A0L	TRANSISTOR SI PNP CHIP	
Q1019	B1ADCF000063	TRANSISTOR SI PNP CHIP	
Q1024	2SD1819A0L	TRANSISTOR SI NPN CHIP	
Q1024	B1ABCF000020	TRANSISTOR SI NPN CHIP	
Q1101	B1BDEB000001	TRANSISTOR SI PNP CHIP	
Q1102	2SD1819A0L	TRANSISTOR SI NPN CHIP	
Q1102	B1ABCF000020	TRANSISTOR SI NPN CHIP	
Q1103	2SB1218A0L	TRANSISTOR SI PNP CHIP	
Q1103	B1ADCF000063	TRANSISTOR SI PNP CHIP	
Q1105	2SB1218A0L	TRANSISTOR SI PNP CHIP	
Q1105	B1ADCF000063	TRANSISTOR SI PNP CHIP	
Q3003	2SB1218A0L	TRANSISTOR SI PNP CHIP	
Q3003	B1ADCF000063	TRANSISTOR SI PNP CHIP	
Q3004	2SC4215-0TL	TRANSISTOR SI NPN CHIP	
Q3004	2SC4215-YTL	TRANSISTOR SI NPN CHIP	
Q3005	2SD1819A0L	TRANSISTOR SI NPN CHIP	
Q3005	B1ABCF000020	TRANSISTOR SI NPN CHIP	
Q3027	2SD1819A0L	TRANSISTOR SI NPN CHIP	
Q3027	B1ABCF000020	TRANSISTOR SI NPN CHIP	
Q4001	XP0460100L	TRANSISTOR SI NPN CHIP	
Q4001	B1HFCFA00003	TRANSISTOR COMPLX CMP SI NPN CHIP	
Q4001	B1HFCFA00009	TRANSISTOR COMPLX CMP SI NPN CHIP	
Q4001	HN1B04FU-GTR	TRANSISTOR COMPLX CMP SI NPN CHIP	
Q4002	2SD1819A0L	TRANSISTOR SI NPN CHIP	
Q4002	B1ABCF000020	TRANSISTOR SI NPN CHIP	
Q4003	2SD1819A0L	TRANSISTOR SI NPN CHIP	
Q4003	B1ABCF000020	TRANSISTOR SI NPN CHIP	
Q4005	2SD1819A0L	TRANSISTOR SI NPN CHIP	
Q4005	B1ABCF000020	TRANSISTOR SI NPN CHIP	
Q4006	2SD06020RL	TRANSISTOR SI NPN CHIP	
Q4006	2SD0602ARL	TRANSISTOR SI NPN CHIP	
Q4006	2SD2432-R	TRANSISTOR SI NPN CHIP	
Q4007	2SB09700RL	TRANSISTOR SI PNP CHIP	
Q4007	2SB1585	TRANSISTOR SI PNP CHIP	
Q4008	2SD1819A0L	TRANSISTOR SI NPN CHIP	
Q4008	B1ABCF000020	TRANSISTOR SI NPN CHIP	
Q4009	2SD1819A0L	TRANSISTOR SI NPN CHIP	
Q4009	B1ABCF000020	TRANSISTOR SI NPN CHIP	
Q6004	2SB1218A0L	TRANSISTOR SI PNP CHIP	
Q6004	B1ADCF000063	TRANSISTOR SI PNP CHIP	
Q6008	UNR521700L	TRANSISTOR SI NPN CHIP	
Q6008	B1GBCFLA0006	TRANSISTOR SI NPN CHIP	
Q6010	UNR521200L	TRANSISTOR SI NPN CHIP	
Q6010	B1GBCFLL0012	TRANSISTOR SI NPN CHIP	
Q6012	2SD1819A0L	TRANSISTOR SI NPN CHIP	
Q6012	B1ABCF000020	TRANSISTOR SI NPN CHIP	
Q6013	2SD0601A0L	TRANSISTOR SI NPN CHIP	
Q6013	B1ABCF000011	TRANSISTOR SI NPN CHIP	
Q6021	2SB1218A0L	TRANSISTOR SI PNP CHIP	
Q6021	B1ADCF000063	TRANSISTOR SI PNP CHIP	

DIODES

Ref. No.	Part No.	Part Name & Description	Remarks
D701	MA2J11100L	DIODE SI CHIP	
D701	B0ACCK000005	DIODE SI CHIP	
D1004	B0JCMD000014	DIODE SI CHIP	
D1005	MA2J11100L	DIODE SI CHIP	
D1005	B0ACCK000005	DIODE SI CHIP	
D1007	MA2J11100L	DIODE SI CHIP	
D1007	B0ACCK000005	DIODE SI CHIP	
D1008	MA2J11100L	DIODE SI CHIP	
D1008	B0ACCK000005	DIODE SI CHIP	
D1011	MAZ81100LL	DIODE ZENER CHIP 11V	
D1012	MAZ80680HL	DIODE ZENER CHIP 6.8V	
D1013	B0JCMD000014	DIODE SI CHIP	
D1014	B0JCMD000014	DIODE SI CHIP	
D1015	B0JCMD000014	DIODE SI CHIP	
D1101	RD12S-T1B	DIODE ZENER CHIP 12V	
D1102	MA2J11100L	DIODE SI CHIP	
D1102	B0ACCK000005	DIODE SI CHIP	
D1103	MA3120WA	DIODE ZENER CHIP 12V	
D3006	MA2S357-K8	DIODE SI CHIP	
D3006	MA2S357-TX	DIODE SI CHIP	
D3006	1SV283TPL2	DIODE SI CHIP	
D6001	MA3J142E0L	DIODE SI CHIP	
D6001	B0ADCJ000012	DIODE SI CHIP	
D6019	MA2J11100L	DIODE SI CHIP	
D6019	B0ACCK000005	DIODE SI CHIP	

RESISTORS

Ref. No.	Part No.	Part Name & Description	Remarks
R301	ERJ3GEYJ122V	MGF CHIP 1/16W 1.2K	
R302	D0HB561ZA002	MGF CHIP 1/16W 560	
R303	ERJ3EKF1001V	MGF CHIP 1/16W 1K	
R304	ERJ3EKF2201V	MGF CHIP 1/16W 2.2K	
R305	ERJ3EKF2201V	MGF CHIP 1/16W 2.2K	
R306	ERJ3GEYJ332V	MGF CHIP 1/16W 3.3K	
R307	ERJ3EKF1002V	MGF CHIP 1/16W 10K	
R308	ERJ3EKF3900V	MGF CHIP 1/16W 390	
R309	ERJ3EKF1001V	MGF CHIP 1/16W 1K	
R310	ERJ3EKF1001V	MGF CHIP 1/16W 1K	
R312	ERJ3GEY0R00V	MGF CHIP 1/16W 0	
R314	ERJ3GEYJ103V	MGF CHIP 1/16W 10K	
R315	D0HB221ZA002	MGF CHIP 1/16W 220	
R316	ERJ3GEYJ221V	MGF CHIP 1/16W 220	
R317	ERJ3GEYJ102V	MGF CHIP 1/16W 1K	
R318	ERJ3GEYJ102V	MGF CHIP 1/16W 1K	
R319	ERJ3GEYJ102V	MGF CHIP 1/16W 1K	
R320	ERJ3GEYJ561V	MGF CHIP 1/16W 560	
R321	D0HB242ZA002	MGF CHIP 1/16W 2.4K	
R322	ERJ3EKF1501V	MGF CHIP 1/16W 1.4K	
R323	ERJ3GEYJ183V	MGF CHIP 1/16W 18K	
R333	ERJ3GEY0R00V	MGF CHIP 1/16W 0	

Ref. No.	Part No.	Part Name & Description	Remarks
R336	ERJ3GEYJ473V	MGF CHIP 1/16W 47K	
R340	ERJ3GEYJ332V	MGF CHIP 1/16W 3.3K	
R342	ERJ3GEYJ222V	MGF CHIP 1/16W 2.2K	
R343	ERJ3GEYJ221V	MGF CHIP 1/16W 220	
R344	ERJ3GEYJ152V	MGF CHIP 1/16W 1.5K	
R345	ERJ3GEYJ104V	MGF CHIP 1/16W 100K	
R346	ERJ3GEYJ473V	MGF CHIP 1/16W 47K	
R347	ERJ3GEYJ123V	MGF CHIP 1/16W 12K	
R348	ERJ3GEYJ104V	MGF CHIP 1/16W 100K	
R349	ERJ3GEYJ563V	MGF CHIP 1/16W 56K	
R350	ERJ3GEYJ822V	MGF CHIP 1/16W 8.2K	
R351	ERJ3GEYJ473V	MGF CHIP 1/16W 47K	
R352	ERJ3GEYJ273V	MGF CHIP 1/16W 27K	
R353	ERJ3GEYJ562V	MGF CHIP 1/16W 5.6K	
R355	ERJ3GEYJ334V	MGF CHIP 1/16W 330K	
R356	ERJ3GEYJ394V	MGF CHIP 1/16W 390K	
R357	ERJ3GEYJ474V	MGF CHIP 1/16W 470K	
R358	ERJ3GEYJ123V	MGF CHIP 1/16W 12K	
R359	ERJ3GEYJ123V	MGF CHIP 1/16W 12K	
R360	ERJ3GEYJ331V	MGF CHIP 1/16W 330	
R361	ERJ3GEYJ103V	MGF CHIP 1/16W 10K	
R362	ERJ3GEYJ101V	MGF CHIP 1/16W 100	
R363	ERJ3GEYJ123V	MGF CHIP 1/16W 12K	
R364	ERJ3GEYJ472V	MGF CHIP 1/16W 4.7K	
R365	ERJ3GEYK395V	MGF CHIP 1/16W 3.9M	
R366	ERJ3GEYJ102V	MGF CHIP 1/16W 1K	
R367	ERJ3GEYJ273V	MGF CHIP 1/16W 27K	
R368	ERJ3GEYJ273V	MGF CHIP 1/16W 27K	
R369	ERJ3GEYJ393V	MGF CHIP 1/16W 39K	
R370	ERJ3GEYJ472V	MGF CHIP 1/16W 4.7K	
R372	ERJ3GEYJ393V	MGF CHIP 1/16W 39K	
R373	ERJ3GEYJ303V	MGF CHIP 1/16W 30K	
R374	ERJ3GEYJ102V	MGF CHIP 1/16W 1K	
R376	ERJ3GEYJ102V	MGF CHIP 1/16W 1K	
R379	ERJ3GEYJ102V	MGF CHIP 1/16W 1K	
R380	ERJ3GEY0R00V	MGF CHIP 1/16W 0	
R381	ERJ3GEYJ272V	MGF CHIP 1/16W 2.7K	
R382	ERJ3GEYJ102V	MGF CHIP 1/16W 1K	
R383	ERJ3GEY0R00V	MGF CHIP 1/16W 0	
R384	ERJ3GEYJ101V	MGF CHIP 1/16W 100	
R385	ERJ3GEYJ101V	MGF CHIP 1/16W 100	
R386	ERJ3GEYJ101V	MGF CHIP 1/16W 100	
R387	ERJ3GEYJ101V	MGF CHIP 1/16W 100	
R388	ERJ3GEYJ101V	MGF CHIP 1/16W 100	
R389	ERJ3GEYJ101V	MGF CHIP 1/16W 100	
R390	ERJ3GEYJ101V	MGF CHIP 1/16W 100	
R391	ERJ3GEY0R00V	MGF CHIP 1/16W 0	
R393	ERJ3GEYJ101V	MGF CHIP 1/16W 100	
R394	ERJ3GEY0R00V	MGF CHIP 1/16W 0	
R395	ERJ3GEYJ332V	MGF CHIP 1/16W 3.3K	
R402	ERJ3EKF1802V	MGF CHIP 1/16W 18K	
R427	ERJ3GEYJ101V	MGF CHIP 1/16W 100	
R430	ERJ3GEYJ104V	MGF CHIP 1/16W 100K	
R431	ERJ3GEYJ101V	MGF CHIP 1/16W 100	

Ref. No.	Part No.	Part Name & Description	Remarks
R436	ERJ3GEYJ102V	MGF CHIP 1/16W 1K	
R450	ERJ3GEYJ391V	MGF CHIP 1/16W 390	
R451	ERJ3GEYJ221V	MGF CHIP 1/16W 220	
R452	D0HB272ZA002	MGF CHIP 1/16W 2.7K	
R453	D0HB104ZA002	MGF CHIP 1/16W 100K	
R454	ERJ3GEYJ102V	MGF CHIP 1/16W 1K	
R456	ERJ3GEYJ4R7V	MGF CHIP 1/16W 4.7	
R505	ERJ3GEYJ473V	MGF CHIP 1/16W 47K	
R530	ERJ3GEYJ472V	MGF CHIP 1/16W 4.7K	
R531	ERJ3GEYJ101V	MGF CHIP 1/16W 100	
R532	ERJ3GEYJ101V	MGF CHIP 1/16W 100	
R533	ERJ3GEYJ101V	MGF CHIP 1/16W 100	
R569	ERJ3GEYJ102V	MGF CHIP 1/16W 1K	
R603	ERJ3GEY0R00V	MGF CHIP 1/16W 0	
R605	ERJ3GEYJ331V	MGF CHIP 1/16W 330	
R608	ERJ3GEYJ101V	MGF CHIP 1/16W 100	
R609	ERJ3GEYJ821V	MGF CHIP 1/16W 820	
R612	ERJ3GEYJ103V	MGF CHIP 1/16W 10K	
R613	ERJ3GEYJ103V	MGF CHIP 1/16W 10K	
R614	ERJ3GEYJ103V	MGF CHIP 1/16W 10K	
R616	ERJ3GEYJ105V	MGF CHIP 1/16W 1M	
R617	ERJ3GEY0R00V	MGF CHIP 1/16W 0	
R618	ERJ3GEY0R00V	MGF CHIP 1/16W 0	
R619	ERJ3GEY0R00V	MGF CHIP 1/16W 0	
R620	ERJ3GEYJ182V	MGF CHIP 1/16W 1.8K	
R622	ERJ3GEY0R00V	MGF CHIP 1/16W 0	
R623	ERJ3GEYJ472V	MGF CHIP 1/16W 4.7K	
R624	ERJ3GEYJ103V	MGF CHIP 1/16W 10K	
R625	ERJ3GEYJ103V	MGF CHIP 1/16W 10K	
R626	ERJ3GEYJ183V	MGF CHIP 1/16W 18K	
R639	ERJ3GEYJ105V	MGF CHIP 1/16W 1M	
R641	ERJ3GEY0R00V	MGF CHIP 1/16W 0	
R643	ERJ3GEY0R00V	MGF CHIP 1/16W 0	
R644	ERJ3GEYJ330V	MGF CHIP 1/16W 33	
R645	ERJ3GEY0R00V	MGF CHIP 1/16W 0	
R646	ERJ3GEYJ101V	MGF CHIP 1/16W 100	
R651	ERJ3GEYJ102V	MGF CHIP 1/16W 1K	
R652	ERJ3GEYJ102V	MGF CHIP 1/16W 1K	
R653	ERJ3GEYJ102V	MGF CHIP 1/16W 1K	
R659	ERJ3GEYJ562V	MGF CHIP 1/16W 5.6K	
R662	ERJ3GEYJ102V	MGF CHIP 1/16W 1K	
R680	ERJ3GEYJ331V	MGF CHIP 1/16W 330	
R683	ERJ3GEYJ101V	MGF CHIP 1/16W 100	
R701	ERJ3GEYJ100V	MGF CHIP 1/16W 10	
R702	ERJ3GEYJ100V	MGF CHIP 1/16W 10	
R703	ERJ3GEYJ100V	MGF CHIP 1/16W 10	
R704	ERJ3GEYJ100V	MGF CHIP 1/16W 10	
R705	ERJ3GEYJ103V	MGF CHIP 1/16W 10K	
R706	ERJ3GEYJ393V	MGF CHIP 1/16W 39K	
R707	ERJ8GEYJ101V	MGF CHIP 1/8W 100	
R708	ERJ3GEYJ393V	MGF CHIP 1/16W 39K	
R709	ERJ3GEYJ103V	MGF CHIP 1/16W 10K	
R712	ERJ3GEYJ332V	MGF CHIP 1/16W 3.3K	
R713	ERJ3GEYJ332V	MGF CHIP 1/16W 3.3K	

Ref. No.	Part No.	Part Name & Description	Remarks
R714	ERJ3GEYJ332V	MGF CHIP 1/16W 3.3K	
R715	ERJ3GEYJ332V	MGF CHIP 1/16W 3.3K	
R718	ERJ3GEYJ562V	MGF CHIP 1/16W 5.6K	
R719	ERJ3GEYJ183V	MGF CHIP 1/16W 18K	
R720	ERJ3GEYJ114V	MGF CHIP 1/16W 110K	
R721	ERJ3GEYJ183V	MGF CHIP 1/16W 18K	
R722	ERJ3GEYJ114V	MGF CHIP 1/16W 110K	
R723	ERJ3GEYJ363V	MGF CHIP 1/16W 36K	
R724	ERJ3GEYJ363V	MGF CHIP 1/16W 36K	
R726	ERJ3GEYJ562V	MGF CHIP 1/16W 5.6K	
R730	ERJ3GEYJ562V	MGF CHIP 1/16W 5.6K	
R732	ERJ3GEYJ562V	MGF CHIP 1/16W 5.6K	
R735	ERJ3GEYJ363V	MGF CHIP 1/16W 36K	
R736	ERJ3GEYJ363V	MGF CHIP 1/16W 36K	
R737	ERJ3GEYJ114V	MGF CHIP 1/16W 110K	
R738	ERJ3GEYJ183V	MGF CHIP 1/16W 18K	
R739	ERJ3GEYJ114V	MGF CHIP 1/16W 110K	
R740	ERJ3GEYJ183V	MGF CHIP 1/16W 18K	
R744	ERJ8GEYJ3R9V	MGF CHIP 1/8W 3.9	
R745	ERJ8GEYJ3R9V	MGF CHIP 1/8W 3.9	
R746	ERJ3GEYJ332V	MGF CHIP 1/16W 3.3K	
R747	ERJ3GEYJ332V	MGF CHIP 1/16W 3.3K	
R748	ERJ3GEYJ332V	MGF CHIP 1/16W 3.3K	
R749	ERJ3GEYJ332V	MGF CHIP 1/16W 3.3K	
R750	ERJ3GEYJ105V	MGF CHIP 1/16W 1M	
R751	ERJ3GEYJ105V	MGF CHIP 1/16W 1M	
R752	ERJ3EKF1002V	MGF CHIP 1/16W 10K	
R753	ERJ3GEYJ332V	MGF CHIP 1/16W 3.3K	
R1003	ERJ3GEYJ102V	MGF CHIP 1/16W 1K	
R1004	ERJ3GEYJ682V	MGF CHIP 1/16W 6.8K	
R1006	ERJ3GEYJ224V	MGF CHIP 1/16W 220K	
R1007	ERJ3GEYJ224V	MGF CHIP 1/16W 220K	
R1009	ERJ3GEYJ223V	MGF CHIP 1/16W 22K	
R1011	ERJ3GEYJ472V	MGF CHIP 1/16W 4.7K	
R1012	D0HB393ZA002	MGF CHIP 1/16W 39K	
R1013	ERJ3GEYJ222V	MGF CHIP 1/16W 2.2K	
R1016	ERJ3GEYJ273V	MGF CHIP 1/16W 27K	
R1017	ERJ3GEYJ473V	MGF CHIP 1/16W 47K	
R1019	ERJ3GEYJ224V	MGF CHIP 1/16W 220K	
R1020	ERJ3GEYJ471V	MGF CHIP 1/16W 470	
R1021	ERJ3GEYJ471V	MGF CHIP 1/16W 470	
R1022	ERJ3GEYJ562V	MGF CHIP 1/16W 5.6K	
R1023	ERJ3GEYJ223V	MGF CHIP 1/16W 22K	
R1026	ERJ3GEYJ682V	MGF CHIP 1/16W 6.8K	
R1027	ERJ3GEYJ682V	MGF CHIP 1/16W 6.8K	
R1028	ERJ3GEYJ471V	MGF CHIP 1/16W 470	
R1029	ERJ3GEYJ102V	MGF CHIP 1/16W 1K	
R1030	ERJ3GEYJ682V	MGF CHIP 1/16W 6.8K	
R1031	D0HB203ZA002	MGF CHIP 20K	
R1032	D0HB151ZA002	MGF CHIP 1/16W 150	
R1033	D0HB103ZA002	MGF CHIP 1/16W 10K	
R1034	D0HB362ZA002	MGF CHIP 1/16W 3.6K	
R1035	D0HB390ZA003	MGF CHIP 1/16W 39	
R1036	D0HB272ZA002	MGF CHIP 1/16W 2.7K	

Ref. No.	Part No.	Part Name & Description	Remarks
R1037	D0HB273ZA002	MGF CHIP 1/16W 27K	
R1038	D0HB390ZA003	MGF CHIP 1/16W 39	
R1039	D0HB302ZA002	MGF CHIP 1/16W 3K	
R1040	D0HB622ZA002	MGF CHIP 1/16W 6.2K	
R1041	D0HB390ZA003	MGF CHIP 1/16W 39	
R1043	D0HB302ZA002	MGF CHIP 1/16W 3K	
R1044	ERJ3GEYJ472V	MGF CHIP 1/16W 4.7K	
R1045	ERJ6GEYJ271V	MGF CHIP 1/10W 270	
R1046	ERJ3GEYJ222V	MGF CHIP 1/16W 2.2K	
R1047	ERJ3GEYJ330V	MGF CHIP 1/16W 33	
R1057	ERJ3GEY0R00V	MGF CHIP 1/16W 0	
R1060	ERJ3GEYJ821V	MGF CHIP 1/16W 820	
R1062	ERJ3GEYJ223V	MGF CHIP 1/16W 22K	
R1064	ERJ3GEYJ472V	MGF CHIP 1/16W 4.7K	
R1065	ERJ3GEYJ821V	MGF CHIP 1/16W 820	
R1067	D0HB392ZA002	MGF CHIP 1/16W 3.9K	
R1068	D0HB182ZA002	MGF CHIP 1/16W 1.8K	
R1069	D0HB330ZA003	MGF CHIP 1/16W 33	
R1071	ERJ3GEYJ473V	MGF CHIP 1/16W 47K	
R1072	ERJ3GEYJ473V	MGF CHIP 1/16W 47K	
R1073	ERJ3GEYJ473V	MGF CHIP 1/16W 47K	
R1074	ERJ3GEYJ473V	MGF CHIP 1/16W 47K	
R1081	ERJ3GEYJ472V	MGF CHIP 1/16W 4.7K	
R1082	ERJ3GEYJ103V	MGF CHIP 1/16W 10K	
R1083	ERJ3GEYJ332V	MGF CHIP 1/16W 3.3K	
R1084	ERJ3GEYJ472V	MGF CHIP 1/16W 4.7K	
R1085	ERJ3GEYJ392V	MGF CHIP 1/16W 3.9K	
R1086	ERJ3GEYJ223V	MGF CHIP 1/16W 22K	
R1087	ERJ3GEYJ473V	MGF CHIP 1/16W 47K	
R1101	ERJ8GEYJR56V	MGF CHIP 1/8W 0.56	
R1102	ERJ8GEYJR56V	MGF CHIP 1/8W 0.56	
R1103	ERJ3GEYJ223V	MGF CHIP 1/16W 22K	
R1104	ERJ3GEYJ560V	MGF CHIP 1/16W 56	
R1105	ERJ3GEYJ222V	MGF CHIP 1/16W 2.2K	
R1106	ERJ3GEYJ561V	MGF CHIP 1/16W 560	
R1107	ERJ3GEYJ562V	MGF CHIP 1/16W 5.6K	
R1108	ERJ3GEYJ473V	MGF CHIP 1/16W 47K	
R1109	ERJ3GEYJ473V	MGF CHIP 1/16W 47K	
R1110	ERJ3GEYJ223V	MGF CHIP 1/16W 22K	
R1111	ERJ3GEYJ223V	MGF CHIP 1/16W 22K	
R1601	ERJ3GEYJ101V	MGF CHIP 1/16W 100	
R1602	ERJ3GEYJ101V	MGF CHIP 1/16W 100	
R1603	ERJ3GEYJ101V	MGF CHIP 1/16W 100	
R1604	ERJ3GEYJ101V	MGF CHIP 1/16W 100 (B)	
R1605	ERJ3GEYJ101V	MGF CHIP 1/16W 100 (B)	
R1606	ERJ3GEYJ101V	MGF CHIP 1/16W 100 (B)	
R1610	ERJ3GEYJ273V	MGF CHIP 1/16W 27K	
R1611	ERJ3GEYJ683V	MGF CHIP 1/16W 68K	
R1612	ERJ3GEYJ472V	MGF CHIP 1/16W 4.7K	
R1613	ERJ3GEYJ472V	MGF CHIP 1/16W 4.7K	
R2001	ERJ3GEYJ152V	MGF CHIP 1/16W 1.5K	
R2003	ERJ3GEYJ101V	MGF CHIP 1/16W 100	
R2004	ERJ3GEYJ332V	MGF CHIP 1/16W 3.3K	
R2008	ERJ8GEYJR33V	MGF CHIP 1/8W 0.33	

Ref. No.	Part No.	Part Name & Description	Remarks
R2010	ERJ3GEYJ102V	MGF CHIP 1/16W 1K	
R2011	ERJ3GEYJ223V	MGF CHIP 1/16W 22K	
R2012	ERJ3GEYJ184V	MGF CHIP 1/16W 180K	
R2013	ERJ3GEYJ332V	MGF CHIP 1/16W 3.3K	
R2014	ERJ3GEYJ684V	MGF CHIP 1/16W 680K	
R2015	ERJ3GEYJ682V	MGF CHIP 1/16W 6.8K	
R2016	ERJ3GEYJ684V	MGF CHIP 1/16W 680K	
R2021	ERJ3GEYJ103V	MGF CHIP 1/16W 10K	
R2022	ERJ3GEYJ221V	MGF CHIP 1/16W 220	
R2023	ERJ8GEYJR33V	MGF CHIP 1/8W 0.33	
R2025	ERJ3GEYJ101V	MGF CHIP 1/16W 100	
R2026	ERJ3GEYJ820V	MGF CHIP 1/16W 82	
R2027	ERJ3GEYJ471V	MGF CHIP 1/16W 470	
R2028	ERJ3GEYJ391V	MGF CHIP 1/16W 390	
R2029	ERJ3GEYJ391V	MGF CHIP 1/16W 390	
R2030	ERJ3GEYJ471V	MGF CHIP 1/16W 470	
R2031	ERJ3GEYJ101V	MGF CHIP 1/16W 100	
R2032	ERJ3GEYJ103V	MGF CHIP 1/16W 10K	
R3002	ERJ3GEYJ154V	MGF CHIP 1/16W 150K	
R3003	ERJ3GEYJ152V	MGF CHIP 1/16W 1.5K	
R3004	ERJ3GEYJ270V	MGF CHIP 1/16W 27	
R3005	ERJ3GEYJ221V	MGF CHIP 1/16W 220	
R3006	ERJ3GEYJ102V	MGF CHIP 1/16W 1K	
R3008	ERJ3GEYJ122V	MGF CHIP 1/16W 1.2K	
R3009	ERJ3GEYJ392V	MGF CHIP 1/16W 3.9K	
R3010	ERJ3GEYJ122V	MGF CHIP 1/16W 1.2K	
R3011	ERJ3GEYJ271V	MGF CHIP 1/16W 270	
R3015	ERJ3GEYJ393V	MGF CHIP 1/16W 39K	
R3016	ERJ3GEYJ821V	MGF CHIP 1/16W 820	
R3017	ERJ3GEYJ101V	MGF CHIP 1/16W 100	
R3018	ERJ3GEYJ471V	MGF CHIP 1/16W 470	
R3022	ERJ3GEYJ102V	MGF CHIP 1/16W 1K	
R3023	ERJ3GEYJ102V	MGF CHIP 1/16W 1K	
R3024	ERJ6GEYJ560V	MGF CHIP 1/10W 56	
R3025	ERJ3GEYJ101V	MGF CHIP 1/16W 100	
R3026	ERJ3GEYJ101V	MGF CHIP 1/16W 100	
R3031	ERJ3GEYJ821V	MGF CHIP 1/16W 820	
R3032	ERJ3GEYJ102V	MGF CHIP 1/16W 1K	
R3033	ERJ3GEYJ182V	MGF CHIP 1/16W 1.8K	
R3034	ERJ3GEYJ821V	MGF CHIP 1/16W 820	
R3035	ERJ3GEYJ182V	MGF CHIP 1/16W 1.8K	
R3036	ERJ3GEYJ471V	MGF CHIP 1/16W 470	
R3037	ERJ3GEYJ332V	MGF CHIP 1/16W 3.3K	
R3038	ERJ3GEYJ472V	MGF CHIP 1/16W 4.7K	
R3039	ERJ3GEYJ101V	MGF CHIP 1/16W 100	
R3040	ERJ3GEYJ222V	MGF CHIP 1/16W 2.2K	
R3041	ERJ3GEYJ681V	MGF CHIP 1/16W 680	
R3044	ERJ3GEYJ681V	MGF CHIP 1/16W 680	
R3045	ERJ3GEYJ102V	MGF CHIP 1/16W 1K	
R3048	ERJ3GEYJ681V	MGF CHIP 1/16W 680	
R3050	ERJ3GEYJ821V	MGF CHIP 1/16W 820	
R3129	ERJ3GEYJ391V	MGF CHIP 1/16W 390	
R3130	ERJ3GEYJ472V	MGF CHIP 1/16W 4.7K	
R3140	ERJ3GEYJ122V	MGF CHIP 1/16W 1.2K	

Ref. No.	Part No.	Part Name & Description	Remarks
R3150	ERJ3GEYJ152V	MGF CHIP 1/16W 1.5K	
R3151	ERJ3GEYJ183V	MGF CHIP 1/16W 18K	
R3152	ERJ3GEYJ821V	MGF CHIP 1/16W 820	
R3153	ERJ3GEYJ272V	MGF CHIP 1/16W 2.7K	
R3154	ERJ3GEYJ332V	MGF CHIP 1/16W 3.3K	
R3174	ERJ3GEY0R00V	MGF CHIP 1/16W 0	
R3180	ERJ3GEYJ101V	MGF CHIP 1/16W 100	
R3181	ERJ3GEYJ473V	MGF CHIP 1/16W 47K	
R3182	ERJ3GEYJ473V	MGF CHIP 1/16W 47K	
R3183	ERJ3GEYJ152V	MGF CHIP 1/16W 1.5K	
R3184	ERJ3GEYJ821V	MGF CHIP 1/16W 820	
R3185	ERJ3GEYJ182V	MGF CHIP 1/16W 1.8K	
R3186	ERJ3GEYJ222V	MGF CHIP 1/16W 2.2K	
R3190	ERJ3GEY0R00V	MGF CHIP 1/16W 0	
R3215	ERJ3GEYJ104V	MGF CHIP 1/16W 100K	
R3216	ERJ3GEY0R00V	MGF CHIP 1/16W 0	
R4002	ERJ3GEYJ103V	MGF CHIP 1/16W 10K	
R4003	ERJ3GEYJ152V	MGF CHIP 1/16W 1.5K	
R4006	ERJ3GEYJ183V	MGF CHIP 1/16W 18K	
R4007	ERJ3GEYJ103V	MGF CHIP 1/16W 10K	
R4009	ERJ3GEYJ2R2V	MGF CHIP 1/16W 2.2	
R4010	ERJ3GEYJ2R2V	MGF CHIP 1/16W 2.2	
R4011	ERJ3GEYJ103V	MGF CHIP 1/16W 10K	
R4012	ERJ3GEYJ104V	MGF CHIP 1/16W 100K	
R4013	ERJ3GEYJ104V	MGF CHIP 1/16W 100K	
R4014	ERJ3GEYJ433V	MGF CHIP 1/16W 43K	
R4015	ERJ3GEYJ561V	MGF CHIP 1/16W 560	
R4016	ERJ3GEYJ561V	MGF CHIP 1/16W 560	
R4017	ERJ3GEYJ123V	MGF CHIP 1/16W 12K	
R4018	ERJ3GEYJ333V	MGF CHIP 1/16W 33K	
R4019	ERJ3GEYJ223V	MGF CHIP 1/16W 22K	
R4020	ERJ3GEYJ183V	MGF CHIP 1/16W 18K	
R4021	ERJ3GEYJ222V	MGF CHIP 1/16W 2.2K	
R4022	ERJ3GEYJ223V	MGF CHIP 1/16W 22K	
R4023	ERJ3GEYJ273V	MGF CHIP 1/16W 27K	
R4024	ERJ3GEYJ332V	MGF CHIP 1/16W 3.3K	
R4025	ERJ3GEYJ332V	MGF CHIP 1/16W 3.3K	
R4026	ERJ3GEYJ333V	MGF CHIP 1/16W 33K	
R4027	ERJ3GEYJ183V	MGF CHIP 1/16W 18K	
R4029	ERJ3GEYJ472V	MGF CHIP 1/16W 4.7K	
R4030	ERJ3GEYJ680V	MGF CHIP 1/16W 68	
R4031	ERJ3GEYJ223V	MGF CHIP 1/16W 22K	
R4032	ERJ3GEYJ222V	MGF CHIP 1/16W 2.2K	
R4033	ERJ3GEYJ222V	MGF CHIP 1/16W 2.2K	
R4034	ERJ3GEYJ223V	MGF CHIP 1/16W 22K	
R4035	ERJ3GEYJ101V	MGF CHIP 1/16W 100	
R4037	ERJ3GEYJ473V	MGF CHIP 1/16W 47K	
R4040	ERJ3GEY0R00V	MGF CHIP 1/16W 0	
R4041	ERJ3GEYJ222V	MGF CHIP 1/16W 2.2K	
R4042	ERJ3GEYJ104V	MGF CHIP 1/16W 100K	
R4043	ERJ3GEYJ822V	MGF CHIP 1/16W 8.2K	
R4044	ERJ3GEYJ562V	MGF CHIP 1/16W 5.6K	
R4045	ERJ3GEYJ331V	MGF CHIP 1/16W 330	
R4046	ERJ3GEYJ334V	MGF CHIP 1/16W 330K	

Ref. No.	Part No.	Part Name & Description	Remarks
R4049	ERJ3GEY0R00V	MGF CHIP 1/16W 0	
R4050	ERJ3GEYJ393V	MGF CHIP 1/16W 39K	
R4051	ERJ3GEYJ103V	MGF CHIP 1/16W 10K	
R4052	ERJ3GEYJ223V	MGF CHIP 1/16W 22K	
R4053	ERJ3GEYJ823V	MGF CHIP 1/16W 82K	
R4054	ERJ3GEYJ433V	MGF CHIP 1/16W 43K	
R4055	ERJ3GEY0R00V	MGF CHIP 1/16W 0	
R4056	ERJ3GEYJ103V	MGF CHIP 1/16W 10K	
R4057	ERJ3GEYJ100V	MGF CHIP 1/16W 10	
R4058	ERJ3GEYJ223V	MGF CHIP 1/16W 22K	
R6004	ERJ3GEYJ332V	MGF CHIP 1/16W 3.3K	
R6006	ERJ3GEYJ223V	MGF CHIP 1/16W 22K	
R6007	ERJ3GEYJ102V	MGF CHIP 1/16W 1K	
R6009	ERJ3GEYJ472V	MGF CHIP 1/16W 4.7K	
R6010	ERJ3GEYJ472V	MGF CHIP 1/16W 4.7K	
R6011	ERJ3GEYJ473V	MGF CHIP 1/16W 47K	
R6015	ERJ3GEYJ273V	MGF CHIP 1/16W 27K	
R6016	ERJ3GEYJ102V	MGF CHIP 1/16W 1K	
R6017	ERJ3GEYJ102V	MGF CHIP 1/16W 1K	
R6018	ERJ3GEYJ102V	MGF CHIP 1/16W 1K	
R6019	ERJ3GEYJ474V	MGF CHIP 1/16W 470K	
R6020	ERJ3GEYJ102V	MGF CHIP 1/16W 1K	
R6021	ERJ3GEYJ102V	MGF CHIP 1/16W 1K	
R6022	ERJ6GEY0R00V	MGF CHIP 1/10W 0	
R6024	ERJ3GEYJ104V	MGF CHIP 1/16W 100K	
R6025	ERJ3GEYJ102V	MGF CHIP 1/16W 1K	
R6026	ERJ3GEYJ102V	MGF CHIP 1/16W 1K	
R6027	ERJ3GEYJ272V	MGF CHIP 1/16W 2.7K	
R6028	ERJ3GEYJ332V	MGF CHIP 1/16W 3.3K	
R6029	ERJ3GEYJ332V	MGF CHIP 1/16W 3.3K	
R6030	ERJ3GEYJ272V	MGF CHIP 1/16W 2.7K	
R6032	ERJ3GEYJ103V	MGF CHIP 1/16W 10K	
R6034	ERJ3GEYJ152V	MGF CHIP 1/16W 1.5K	
R6035	ERJ3GEYJ472V	MGF CHIP 1/16W 4.7K	
R6036	ERJ3GEYJ563V	MGF CHIP 1/16W 56K	
R6037	ERJ3GEYJ102V	MGF CHIP 1/16W 1K	
R6038	ERJ3GEYJ102V	MGF CHIP 1/16W 1K	
R6039	ERJ3GEYJ223V	MGF CHIP 1/16W 22K	
R6040	ERJ3GEYJ561V	MGF CHIP 1/16W 560	
R6041	ERJ3GEYJ102V	MGF CHIP 1/16W 1K	
R6042	ERJ3GEYJ124V	MGF CHIP 1/16W 120K	
R6046	ERJ3GEYJ102V	MGF CHIP 1/16W 1K	
R6047	ERJ3GEYJ472V	MGF CHIP 1/16W 4.7K	
R6048	ERJ3GEYJ472V	MGF CHIP 1/16W 4.7K	
R6049	ERJ3GEYJ472V	MGF CHIP 1/16W 4.7K	
R6050	ERJ3GEYJ472V	MGF CHIP 1/16W 4.7K	
R6051	ERJ3GEYJ102V	MGF CHIP 1/16W 1K	
R6052	ERJ3GEYJ102V	MGF CHIP 1/16W 1K	
R6054	ERJ3GEYJ223V	MGF CHIP 1/16W 22K	
R6056	ERJ3GEYJ102V	MGF CHIP 1/16W 1K	
R6058	ERJ3GEYJ102V	MGF CHIP 1/16W 1K	
R6059	ERJ3GEYJ102V	MGF CHIP 1/16W 1K	
R6060	ERJ3GEYJ102V	MGF CHIP 1/16W 1K	
R6062	ERJ3GEYJ102V	MGF CHIP 1/16W 1K	

Ref. No.	Part No.	Part Name & Description	Remarks
R6064	ERJ3GEYJ563V	MGF CHIP 1/16W 56K	
R6066	ERJ3GEYJ682V	MGF CHIP 1/16W 6.8K	
R6068	ERJ3GEYJ102V	MGF CHIP 1/16W 1K	
R6070	ERJ3GEYJ473V	MGF CHIP 1/16W 47K	
R6072	ERJ3GEYJ392V	MGF CHIP 1/16W 3.9K	
R6073	ERJ3GEYJ223V	MGF CHIP 1/16W 22K	
R6074	ERJ3GEYJ223V	MGF CHIP 1/16W 22K	
R6075	ERJ3GEYJ473V	MGF CHIP 1/16W 47K	
R6077	ERJ3GEYJ473V	MGF CHIP 1/16W 47K	
R6079	ERJ3GEYJ472V	MGF CHIP 1/16W 4.7K	
R6080	ERJ3GEYJ472V	MGF CHIP 1/16W 4.7K	
R6081	ERJ3GEYJ472V	MGF CHIP 1/16W 4.7K	
R6082	ERJ3GEYJ102V	MGF CHIP 1/16W 1K	
R6083	ERJ3GEYJ681V	MGF CHIP 1/16W 680	
R6084	ERJ3GEYJ561V	MGF CHIP 1/16W 560	
R6085	ERJ3GEYJ561V	MGF CHIP 1/16W 560	
R6086	ERJ3GEYJ561V	MGF CHIP 1/16W 560	
R6087	ERJ3GEYJ561V	MGF CHIP 1/16W 560	
R6088	ERJ3GEYJ561V	MGF CHIP 1/16W 560	
R6089	ERJ3GEYJ472V	MGF CHIP 1/16W 4.7K	
R6090	ERJ3GEYJ472V	MGF CHIP 1/16W 4.7K	
R6091	ERJ3GEYJ472V	MGF CHIP 1/16W 4.7K	
R6092	ERJ3GEYJ472V	MGF CHIP 1/16W 4.7K	
R6093	ERJ3GEYJ472V	MGF CHIP 1/16W 4.7K	
R6094	ERJ3GEYJ472V	MGF CHIP 1/16W 4.7K	
R6095	ERJ3GEYJ563V	MGF CHIP 1/16W 56K	
R6096	ERJ3GEYJ104V	MGF CHIP 1/16W 100K	
R6097	ERJ3GEYJ102V	MGF CHIP 1/16W 1K	
R6098	ERJ3GEYJ102V	MGF CHIP 1/16W 1K	
R6099	ERJ3GEYJ473V	MGF CHIP 1/16W 47K	
R6101	ERJ3GEYJ104V	MGF CHIP 1/16W 100K	
R6102	D0HB183ZA002	MGF CHIP 1/16W 18K	
R6103	ERJ3GEYJ272V	MGF CHIP 1/16W 2.7K	
R6104	D0HB103ZA002	MGF CHIP 1/16W 10K	
R6108	ERJ3GEYJ224V	MGF CHIP 1/16W 220K	
R6110	ERJ3GEYJ472V	MGF CHIP 1/16W 4.7K	
R6111	ERJ3GEYJ472V	MGF CHIP 1/16W 4.7K	
R6112	ERJ3GEYJ472V	MGF CHIP 1/16W 4.7K	
R6113	ERJ3GEYJ272V	MGF CHIP 1/16W 2.7K	
R6114	ERJ3GEYJ154V	MGF CHIP 1/16W 150K	
R6115	ERJ3GEYJ393V	MGF CHIP 1/16W 39K	
R6116	ERJ3GEYJ393V	MGF CHIP 1/16W 39K	
R6119	ERJ8GEYJ101V	MGF CHIP 1/8W 100	
R6120	ERJ3GEYJ472V	MGF CHIP 1/16W 4.7K	
R6129	ERJ3GEYJ473V	MGF CHIP 1/16W 47K	
R6143	ERJ3GEYJ271V	MGF CHIP 1/16W 270	
R6144	ERJ3GEYJ271V	MGF CHIP 1/16W 270	
R6145	ERJ3GEYJ472V	MGF CHIP 1/16W 4.7K	
R6146	ERJ3GEYJ224V	MGF CHIP 1/16W 220K	
R6147	ERJ3GEYJ222V	MGF CHIP 1/16W 2.2K	
R6148	ERJ3GEYJ472V	MGF CHIP 1/16W 4.7K	
R6149	ERJ3GEYJ472V	MGF CHIP 1/16W 4.7K	
R6162	ERJ3GEYJ102V	MGF CHIP 1/16W 1K	
R6191	ERJ3GEYJ222V	MGF CHIP 1/16W 2.2K	

Ref. No.	Part No.	Part Name & Description	Remarks
R6201	ERJ3GEYJ103V	MGF CHIP 1/16W 10K	
R6202	ERJ3GEYJ103V	MGF CHIP 1/16W 10K	
R6209	ERJ3GEYJ225V	MGF CHIP 1/16W 2.2M	
R6210	ERJ3GEYJ561V	MGF CHIP 1/16W 560	
R6215	ERJ3GEYJ132V	MGF CHIP 1/16W 1.3K	
R6217	ERJ3GEYJ392V	MGF CHIP 1/16W 3.9K	
R6226	ERJ3GEY0R00V	MGF CHIP 1/16W 0	

CAPACITORS

Ref. No.	Part No.	Part Name & Description	Remarks
C301	ECJ1VC1H330J	C CHIP 50V 33PF	
C302	ECJ1VC1H560J	C CHIP 50V 56PF	
C305	ECJ1VC1H470J	C CHIP 50V 47PF	
C306	ECJ2VB1C104K	C CHIP 16V 0.1UF	
C307	ECJ1VF1C104Z	C CHIP 16V 0.1UF	
C309	ECST0JY106	TANTALUM CHIP 6.3V 10UF	
C310	ECJ2YB1A105K	C CHIP 10V 1UF	
C311	ECJ2YB1A105K	C CHIP 10V 1UF	
C312	ECJ1VF1H103Z	C CHIP 50V 0.01UF	
C314	ECST0JY106	TANTALUM CHIP 6.3V 10UF	
C316	ECJ2YB1A105K	C CHIP 10V 1UF	
C317	ECJ2YB1A105K	C CHIP 10V 1UF	
C319	ECJ1VF1H103Z	C CHIP 50V 0.01UF	
C320	ECJ1VF1H103Z	C CHIP 50V 0.01UF	
C321	ECST0JY106	TANTALUM CHIP 6.3V 10UF	
C323	ECST0JY106	TANTALUM CHIP 6.3V 10UF	
C326	ECJ1VF1H103Z	C CHIP 50V 0.01UF	
C327	ECJ1VF1H103Z	C CHIP 50V 0.01UF	
C329	ECJ1VF1C104Z	C CHIP 16V 0.1UF	
C330	ECEV0JA220S	ELECTROLYTIC CHIP 6.3V 22UF	
C338	ECJ1VF1C104Z	C CHIP 16V 0.1UF	
C339	ECJ2VF1C105Z	C CHIP 16V 1UF	
C340	ECJ1VB1H103K	C CHIP 50V 0.01UF	
C341	ECJ1VB1H102K	C CHIP 50V 1000PF	
C342	ECJ1VF1C104Z	C CHIP 16V 0.1UF	
C347	ECJ1VB1H102K	C CHIP 50V 1000PF	
C357	ECJ1VF1C104Z	C CHIP 16V 0.1UF	
C401	ECJ1VB1H103K	C CHIP 50V 0.01UF	
C402	ECJ1VB1H103K	C CHIP 50V 0.01UF	
C403	ECJ1VB1H103K	C CHIP 50V 0.01UF	
C450	ECJ1VB1H103K	C CHIP 50V 0.01UF	
C451	ECJ2YB1A105K	C CHIP 10V 1UF	
C501	ECJ1VF1C104Z	C CHIP 16V 0.1UF	
C502	ECJ1VF1C104Z	C CHIP 16V 0.1UF	
C503	ECJ1VF1C104Z	C CHIP 16V 0.1UF	
C504	ECJ1VF1C104Z	C CHIP 16V 0.1UF	
C505	ECJ1VF1C104Z	C CHIP 16V 0.1UF	
C506	ECJ1VF1C104Z	C CHIP 16V 0.1UF	
C507	ECJ1VF1C104Z	C CHIP 16V 0.1UF	
C508	ECJ1VF1C104Z	C CHIP 16V 0.1UF	
C509	ECJ1VF1C104Z	C CHIP 16V 0.1UF	
C510	ECJ1VF1C104Z	C CHIP 16V 0.1UF	
C511	ECJ1VF1C104Z	C CHIP 16V 0.1UF	

Ref. No.	Part No.	Part Name & Description	Remarks
C528	ECJ1VF1H103Z	C CHIP 50V 0.01UF	
C531	ECJ1VF1H103Z	C CHIP 50V 0.01UF	
C604	ECJ1VC1H150J	C CHIP 50V 15PF	
C605	ECST0JY226R	TANTALUM CHIP 6.3V 22UF	
C606	ECJ1VF1C104Z	C CHIP 16V 0.1UF	
C607	ECJ1VC1H150J	C CHIP 50V 15PF	
C611	ECJ1VC1H150J	C CHIP 50V 15PF	
C613	ECJ1VF1C104Z	C CHIP 16V 0.1UF	
C614	F1J1C1050011	C CHIP 16V 1UF	
C615	ECJ1VF1H103Z	C CHIP 50V 0.01UF	
C616	ECJ1VB1C104K	C CHIP 16V 0.1UF	
C617	ECJ2VF1E104Z	C CHIP 25V 0.1UF	
C618	ECJ1VC1H060C	C CHIP 50V 6PF	
C619	ECJ1VC1H010C	C CHIP 50V 1PF	
C623	ECEV1CA100S	ELECTROLYTIC CHIP 16V 10UF	
C633	F1J1C1050011	C CHIP 16V 1UF	
C634	F1J1C1050011	C CHIP 16V 1UF	
C636	ECJ1VF1A105Z	C CHIP 10V 1UF	
C638	ECJ1VF1A105Z	C CHIP 10V 1UF	
C639	ECJ1VF1A105Z	C CHIP 10V 1UF	
C640	ECJ1VF1C104Z	C CHIP 16V 0.1UF	
C642	ECJ2YB1A105K	C CHIP 10V 1UF	
C643	ECST0JY106	TANTALUM CHIP 6.3V 10UF	
C644	ECJ1VF1C104Z	C CHIP 16V 0.1UF	
C645	ECJ1VF1C104Z	C CHIP 16V 0.1UF	
C646	ECST0JY106	TANTALUM CHIP 6.3V 10UF	
C647	ECJ1VF1C104Z	C CHIP 16V 0.1UF	
C651	ECJ1VB1H102K	C CHIP 50V 1000PF	
C703	ECJ2YF1A475Z	C CHIP 10V 4.7UF	
C704	ECJ2YF1A475Z	C CHIP 10V 4.7UF	
C706	ECJ2YF1A475Z	C CHIP 10V 4.7UF	
C707	ECJ2YF1A475Z	C CHIP 10V 4.7UF	
C708	ECEV1CA470S	ELECTROLYTIC CHIP 16V 47UF	
C709	ECJ1VF1H103Z	C CHIP 50V 0.01UF	
C710	ECJ1VF1H103Z	C CHIP 50V 0.01UF	
C1002	ECJ1VB1C104K	C CHIP 16V 0.1UF	
C1003	ECJ1VB1C104K	C CHIP 16V 0.1UF	
C1005	ECJ1VF1C104Z	C CHIP 16V 0.1UF	
C1007	ECJ1VF1C104Z	C CHIP 16V 0.1UF	
C1008	ECJ1VC1H101J	C CHIP 50V 100PF	
C1009	VCUSJEJ105KB	C CHIP 6.3V 1UF	
C1010	ECJ1VB1C104K	C CHIP 16V 0.1UF	
C1011	ECJ1VB1H472K	C CHIP 50V 4700PF	
C1012	ECJ1VB1H222K	C CHIP 50V 2200PF	
C1013	ECJ1VC1H101J	C CHIP 50V 100PF	
C1014	ECJ1VC1H470J	C CHIP 50V 47PF	
C1015	ECJ1VC1H101J	C CHIP 50V 100PF	
C1016	ECJ1VC1H101J	C CHIP 50V 100PF	
C1017	ECJ1VC1H470J	C CHIP 50V 47PF	
C1018	ECJ1VB1H472K	C CHIP 50V 4700PF	
C1019	ECJ1VB1H472K	C CHIP 50V 4700PF	
C1020	F1J1C1050011	C CHIP 16V 1UF	
C1021	ECEV1CA470S	ELECTROLYTIC CHIP 16V 47UF	
C1022	F1K1C4750017	C CHIP 16V 4.7UF	

Ref. No.	Part No.	Part Name & Description	Remarks
C1023	VCUSJBJ335KB	C CHIP 6.3V 3.3UF	
C1024	ECST1AY475	TANTALUM CHIP 16V 4.7UF	
C1025	ECJ1VB1H471K	C CHIP 50V 470PF	
C1026	ECJ2YB0J225K	C CHIP 6.3V 2.2UF	
C1027	ECEV0GA470S	ELECTROLYTIC CHIP 4V 47UF	
C1028	ECJ1VB1H102K	C CHIP 50V 1000PF	
C1029	F1J1C1050011	C CHIP 16V 1UF	
C1030	ECJ2VF1C105Z	C CHIP 16V 1UF	
C1031	ECEV1CA100S	ELECTROLYTIC CHIP 16V 10UF	
C1032	F1J1C1050011	C CHIP 16V 1UF	
C1033	ECJ1VB1C104K	C CHIP 16V 0.1UF	
C1034	VCUSQBH105ZF	C CHIP 50V 1UF	
C1035	VCUSQBH105ZF	C CHIP 50V 1UF	
C1036	ECJ1VB1H102K	C CHIP 50V 1000PF	
C1037	ECJ2YB0J225K	C CHIP 6.3V 2.2UF	
C1038	ECEV0JA220S	ELECTROLYTIC CHIP 6.3V 22UF	
C1039	ECJ1VB1H102K	C CHIP 50V 1000PF	
C1040	ECJ2VF1C105Z	C CHIP 16V 1UF	
C1041	ECEV1CA100S	ELECTROLYTIC CHIP 16V 10UF	
C1042	ECEV0JA470S	ELECTROLYTIC CHIP 6.3V 47UF	
C1044	ECST0JY226R	TANTALUM CHIP 6.3V 22UF	
C1045	ECJ1VF1A105Z	C CHIP 10V 1UF	
C1046	ECJ2YB1A105K	C CHIP 10V 1UF	
C1049	ECJ1VB1H102K	C CHIP 50V 1000PF	
C1051	ECJ1VF1C104Z	C CHIP 16V 0.1UF	
C1053	ECJ1VB1C104K	C CHIP 16V 0.1UF	
C1054	ECJ1VF1A105Z	C CHIP 10V 1UF	
C1055	ECJ2YB1A105K	C CHIP 10V 1UF	
C1059	ECJ2YB1A105K	C CHIP 10V 1UF	
C1060	ECJ1VF1A105Z	C CHIP 10V 1UF	
C1061	ECJ1VC1H470J	C CHIP 50V 47PF	
C1062	ECJ1VC1H470J	C CHIP 50V 47PF	
C1063	ECJ1VC1H101J	C CHIP 50V 100PF	
C1064	ECJ1VB1C104K	C CHIP 16V 0.1UF	
C1065	ECJ1VB1H103K	C CHIP 50V 0.01UF	
C1101	ECJ2YB0J225K	C CHIP 6.3V 2.2UF	
C2001	ECJ1VF1C104Z	C CHIP 16V 0.1UF	
C2002	ECJ1VF1C104Z	C CHIP 16V 0.1UF	
C2003	ECJ1VF1C104Z	C CHIP 16V 0.1UF	
C2007	ECEV0JA220S	ELECTROLYTIC CHIP 6.3V 22UF	
C2008	ECJ2VB1E333K	C CHIP 25V 0.033UF	
C2010	ECJ1VB1C683K	C CHIP 16V 0.068UF	
C2011	ECJ2YB1C334K	C CHIP 16V 0.33UF	
C2012	ECJ1VB1C473K	C CHIP 16V 0.047UF	
C2013	ECJ1VB1C473K	C CHIP 16V 0.047UF	
C2015	ECJ1VB1H152K	C CHIP 50V 1500PF	
C2016	ECJ1VB1H331K	C CHIP 50V 330PF	
C2017	ECJ2YB1A105K	C CHIP 10V 1UF	
C2021	ECUV1E473ZFV	C CHIP 25V 0.047UF +80%-20%	
C2022	ECJ2VF1E473Z	C CHIP 25V 0.047UF	
C2023	ECJ1VB1C104K	C CHIP 16V 0.1UF	
C2024	ECJ2YB1A105K	C CHIP 10V 1UF	
C2025	ECJ1VB1E103K	C CHIP 25V 0.01UF	
C2030	ECJ1VF1C104Z	C CHIP 16V 0.1UF	

Ref. No.	Part No.	Part Name & Description	Remarks
C2031	ECJ1VF1C104Z	C CHIP 16V 0.1UF	
C2032	ECJ1VF1C104Z	C CHIP 16V 0.1UF	
C2040	ECEV1CA100S	ELECTROLYTIC CHIP 16V 10UF	
C2045	ECJ1VB1E103K	C CHIP 25V 0.01UF	
C3001	VCUSJBJ335KB	C CHIP 6.3V 3.3UF	
C3002	ECJ1VF1H103Z	C CHIP 50V 0.01UF	
C3003	ECST0JY226R	TANTALUM CHIP 6.3V 22UF	
C3005	ECJ1VC1H220J	C CHIP 50V 22PF	
C3006	ECJ1VB1H332K	C CHIP 50V 3300PF	
C3007	ECJ2VF1H104Z	C CHIP 50V 0.1UF	
C3008	ECJ1VB1H103K	C CHIP 50V 0.01UF	
C3009	ECJ2VF1H104Z	C CHIP 50V 0.1UF	
C3010	ECJ1VF1H103Z	C CHIP 50V 0.01UF	
C3011	ECJ1VC1H221J	C CHIP 50V 220PF	
C3012	ECJ1VB1H821K	C CHIP 50V 820PF	
C3013	ECJ1VC1H560J	C CHIP 50V 56PF	
C3014	ECJ1VC1H331J	C CHIP 50V 330PF	
C3015	ECJ1VC1H561J	C CHIP 50V 560PF	
C3017	ECJ1VF1H103Z	C CHIP 50V 0.01UF	
C3018	ECJ1VB1C104K	C CHIP 16V 0.1UF	
C3019	ECJ1VF1H103Z	C CHIP 50V 0.01UF	
C3021	ECST0JY226R	TANTALUM CHIP 6.3V 22UF	
C3023	ECJ1VB1C473K	C CHIP 16V 0.047UF	
C3024	ECJ2VF1C105Z	C CHIP 16V 1UF	
C3025	ECJ1VB1H103K	C CHIP 50V 0.01UF	
C3028	ECJ1VB1H103K	C CHIP 50V 0.01UF	
C3029	ECJ1VB1H103K	C CHIP 50V 0.01UF	
C3030	ECJ1VF1H103Z	C CHIP 50V 0.01UF	
C3031	ECJ1VB1A224K	C CHIP 10V 0.22UF	
C3032	ECJ1VB1H332K	C CHIP 50V 3300PF	
C3033	ECST1CY225	TANTALUM CHIP 16V 2.2UF	
C3034	ECJ2VF1C105Z	C CHIP 16V 1UF	
C3036	ECST1AY475	TANTALUM CHIP 16V 4.7UF	
C3038	ECJ1VC1H560J	C CHIP 50V 56PF	
C3039	ECJ1VC1H150J	C CHIP 50V 15PF	
C3040	ECJ1VF1H103Z	C CHIP 50V 0.01UF	
C3041	ECJ1VB1C104K	C CHIP 16V 0.1UF	
C3042	ECEV0JA220S	ELECTROLYTIC CHIP 6.3V 22UF	
C3043	ECST0JY226R	TANTALUM CHIP 6.3V 22UF	
C3045	ECEV1HA3R3S	ELECTROLYTIC CHIP 50V 3.3UF	
C3046	ECEV0GA221S	ELECTROLYTIC CHIP 4V 220UF	
C3047	ECJ2YB1A105K	C CHIP 10V 1UF	
C3048	ECJ1VF1H103Z	C CHIP 50V 0.01UF	
C3053	ECJ1VC1H390J	C CHIP 50V 39PF	
C3054	ECJ1VC1H101J	C CHIP 50V 100PF	
C3055	ECJ1VC1H181J	C CHIP 50V 180PF	
C3057	ECJ1VC1H180J	C CHIP 50V 18PF	
C3058	ECJ1VC1H120J	C CHIP 50V 12PF	
C3059	ECJ1VC1H100D	C CHIP 50V 10PF	
C3060	ECJ1VC1H120J	C CHIP 50V 12PF	
C3061	ECJ1VF1H103Z	C CHIP 50V 0.01UF	
C3068	ECJ1VF1H103Z	C CHIP 50V 0.01UF	
C3070	ECJ1VF1C104Z	C CHIP 16V 0.1UF	
C3072	ECJ1VB1H103K	C CHIP 50V 0.01UF	

Ref. No.	Part No.	Part Name & Description	Remarks
C3073	ECJ1VB1C104K	C CHIP 16V 0.1UF	
C3074	ECEV0JA220S	ELECTROLYTIC CHIP 6.3V 22UF	
C3075	ECJ1VB1H103K	C CHIP 50V 0.01UF	
C3077	ECJ1VF1H103Z	C CHIP 50V 0.01UF	
C3078	ECJ1VF1H103Z	C CHIP 50V 0.01UF	
C3079	ECJ1VB1H102K	C CHIP 50V 1000PF	
C3080	ECJ1VF1H103Z	C CHIP 50V 0.01UF	
C3081	ECJ1VF1H103Z	C CHIP 50V 0.01UF	
C3085	ECJ1VF1C104Z	C CHIP 16V 0.1UF	
C3098	ECJ1VF1C104Z	C CHIP 16V 0.1UF	
C3107	ECJ1VF1H103Z	C CHIP 50V 0.01UF	
C3132	ECJ2VF1C105Z	C CHIP 16V 1UF	
C3135	ECJ1VF1H103Z	C CHIP 50V 0.01UF	
C3139	ECJ1VF1H103Z	C CHIP 50V 0.01UF	
C3150	ECJ1VF1H103Z	C CHIP 50V 0.01UF	
C3152	ECJ1VB1H681K	C CHIP 50V 680PF	
C3153	ECJ1VB1H681K	C CHIP 50V 680PF	
C3157	ECJ1VC1H470J	C CHIP 50V 47PF	
C3158	ECJ1VC1H080C	C CHIP 50V 8PF	
C4002	F1J1A1050002	C CHIP 10V 1UF	
C4003	ECJ1VB1H102K	C CHIP 50V 1000PF	
C4004	ECUT2A472JCM	C CHIP 100V 4700PF	
C4005	ECJ2VB1H682K	C CHIP 50V 6800PF	
C4006	ECJ1VB1E223K	C CHIP 25V 0.022UF	
C4007	ECJ2YB1A105K	C CHIP 10V 1UF	
C4008	ECST0JY226R	TANTALUM CHIP 6.3V 22UF	
C4009	ECJ2VF1H104Z	C CHIP 50V 0.1UF	
C4011	ECJ1VB1H472K	C CHIP 50V 4700PF	
C4012	ECJ1VB1H103K	C CHIP 50V 0.01UF	
C4013	ECJ1VF1E104Z	C CHIP 25V 0.1UF	
C4014	ECJ1VF1E104Z	C CHIP 25V 0.1UF	
C4015	ECJ2VF1E104Z	C CHIP 25V 0.1UF	
C4016	ECST0JY226R	TANTALUM CHIP 6.3V 22UF	
C4017	ECJ1VF1C104Z	C CHIP 16V 0.1UF	
C4019	F1J1A1050002	C CHIP 10V 1UF	
C4021	ECEV1CA100S	ELECTROLYTIC CHIP 16V 10UF	
C4022	ECJ2YB1C474K	C CHIP 16V 0.47UF	
C4023	ECST0JY475	TANTALUM CHIP 6.3V 4.7UF	
C4026	ECJ2VB1C104K	C CHIP 16V 0.1UF	
C4027	ECJ1VB1H153K	C CHIP 50V 0.015UF	
C4028	ECST0JY106	TANTALUM CHIP 6.3V 10UF	
C4030	ECST0JY475	TANTALUM CHIP 6.3V 4.7UF	
C4031	ECJ1VB1H122K	C CHIP 50V 1200PF	
C4032	F1J1A1050004	C CHIP 10V 1UF	
C4033	ECJ1VB1H272K	C CHIP 50V 2700PF	
C4034	ECJ1VB1H103K	C CHIP 50V 0.01UF	
C4035	ECJ2VF1C105Z	C CHIP 16V 1UF	
C4036	ECJ2VF1C105Z	C CHIP 16V 1UF	
C4039	ECJ2YB1C474K	C CHIP 16V 0.47UF	
C4041	ECJ1VB1H222K	C CHIP 50V 2200PF	
C6001	ECJ1VC1H330J	C CHIP 50V 33PF	
C6002	ECJ1VB1A224K	C CHIP 10V 0.22UF	
C6004	ECJ2VF1C105Z	C CHIP 16V 1UF	
C6006	ECJ1VF1H103Z	C CHIP 50V 0.01UF	

Ref. No.	Part No.	Part Name & Description	Remarks
C6007	ECJ1VC1H120J	C CHIP 50V 12PF	
C6008	ECJ1VC1H100D	C CHIP 50V 10PF	
C6009	ECJ1VF1C104Z	C CHIP 16V 0.1UF	
C6011	ECJ1VF1H103Z	C CHIP 50V 0.01UF	
C6013	ECJ1VF1C104Z	C CHIP 16V 0.1UF	
C6014	ECJ1VF1H103Z	C CHIP 50V 0.01UF	
C6017	ECJ1VB1C104K	C CHIP 16V 0.1UF	
C6018	ECJ2YB1A105K	C CHIP 10V 1UF	
C6020	ECJ1VF1C104Z	C CHIP 16V 0.1UF	
C6022	ECJ1VF1H103Z	C CHIP 50V 0.01UF	
C6023	ECJ1VB1H102K	C CHIP 50V 1000PF	
C6025	ECEV0JA470S	ELECTROLYTIC CHIP 6.3V 47UF	
C6028	ECJ1VC1H010C	C CHIP 50V 1PF	
C6029	ECJ2VF1C105Z	C CHIP 16V 1UF	
C6031	ECJ1VB1H103K	C CHIP 50V 0.01UF	
C6044	ECJ1VF1C104Z	C CHIP 16V 0.1UF	
C6201	ECJ1VB1C104K	C CHIP 16V 0.1UF	
C6202	ECJ1VB1C104K	C CHIP 16V 0.1UF	
C6207	ECJ1VC1H101J	C CHIP 50V 100PF	
C6208	ECJ2VF1C224Z	C CHIP 16V 0.22UF	
C6214	ECJ1VB1H102K	C CHIP 50V 1000PF	
C6220	ECJ2YF1C155Z	C CHIP 16V 1.5UF	
C6221	ECJ1VB1H102K	C CHIP 50V 1000PF	
C6222	F1K1C105A023	C CHIP 16V 1UF	
C6223	ECST0JY226R	TANTALUM CHIP 6.3V 22UF	
C6225	ECJ1VB1H103K	C CHIP 50V 0.01UF	

COILS

Ref. No.	Part No.	Part Name & Description	Remarks
L302	G1C470J00006	COIL CHIP 47UH	
L303	G1C330JA0010	COIL CHIP 33UH	
L305	G1C3R9J00004	COIL CHIP 3.9UH	
L307	ELJFA101KF	COIL CHIP 100UH	
L308	G1C100KA0002	COIL CHIP 10UH	
L310	G1C4R7M00021	COIL CHIP 4.7UH	
L601	G1C470J00001	COIL CHIP 47UH	
L602	G1C150J00005	COIL CHIP 15UH	
L605	G1C150J00002	COIL CHIP 15UH	
L1001	G1C100MA0059	COIL CHIP 10UH	
L1002	G1C100MA0059	COIL CHIP 10UH	
L1003	G1C330MA0011	CHOKE COIL 33UH	
L1004	G1C330MA0059	COIL CHIP 33UH	
L1005	G1C100MA0065	CHOKE COIL 10UH	
L1006	G1C100KA0002	COIL CHIP 10UH	
L1007	G1C100KA0005	COIL CHIP 10UH	
L1008	G1C4R7M00014	COIL CHIP 4.7UH	
L1009	G1C470J00006	COIL CHIP 47UH	
L1010	G1C470J00006	COIL CHIP 47UH	
L1011	G1C470J00006	COIL CHIP 47UH	
L1012	G1C100KA0005	COIL CHIP 10UH	
L1014	G1C4R7M00014	COIL CHIP 4.7UH	
L1015	G1C100KA0019	BEAD INDUCTOR 10UH	
L1016	G1C100KA0019	BEAD INDUCTOR 10UH	

Ref. No.	Part No.	Part Name & Description	Remarks
L1017	G1C330MA0011	CHOKE COIL 33UH	
L3001	G1C220K00013	BEAD INDUCTOR 22UH	
L3002	G1C220K00013	BEAD INDUCTOR 22UH	
L3003	G1C220K00013	BEAD INDUCTOR 22UH	
L3004	G1C220K00013	BEAD INDUCTOR 22UH	
L3006	G1C220K00013	BEAD INDUCTOR 22UH	
L3009	G1C820J00001	COIL CHIP 82UH	
L3011	G1C470J00006	COIL CHIP 47UH	
L3012	G1C120J00003	COIL CHIP 12UH	
L3013	G1C331J00004	COIL CHIP 330UH	
L3014	G1C180J00003	COIL CHIP 18UH	
L3015	G1C331J00004	COIL CHIP 330UH	
L3016	G1C470J00006	COIL CHIP 47UH	
L3017	G1C331J00004	BEAD INDUCTOR 330UH	
L3030	G1C220K00013	COIL CHIP 22UH	
L3031	G1C470J00006	COIL CHIP 47UH	
L4001	G1C221KA0002	COIL CHIP 220UH	
L4002	G1C101KA0002	COIL CHIP 100UH	

CRYSTAL OSCILLATOR

Ref. No.	Part No.	Part Name & Description	Remarks
X501	EF0S5004E5	CRYSTAL OSCILLATOR	
X601	H0A286500001	CRYSTAL OSCILLATOR	
X3001	LSSX0070	CRYSTAL OSCILLATOR	
X6001	H0A143500002	CRYSTAL OSCILLATOR	
X6002	LSSX0072	CRYSTAL OSCILLATOR	

PIN HEADERS

Ref. No.	Part No.	Part Name & Description	Remarks
P3	K1KA14A00168	CONNECTOR 14P (B)	
P4	K1KA05A00128	CONNECTOR 5P (A)	

FPC CONNECTOR

Ref. No.	Part No.	Part Name & Description	Remarks
FP1	K1MN28B00039	CONNECTOR 28P	
FP2	K1MN24A00014	CONNECTOR 24P	
FP4	K1MN07B00052	CONNECTOR 7P	
FP6	K1MN30B00094	CONNECTOR 30P	
FP7	K1MN14A00061	CONNECTOR 14P	
FP8	K1MN12A00043	CONNECTOR 12P	
FP9	K1MN22A00024	CONNECTOR 22P	
FP10	K1MN26A00026	CONNECTOR 26P	
FP11	K1MN06A00036	CONNECTOR 6P	
FP12	LSJSQG10DG	CONNECTOR 10P	
FP13	K1MN12B00074	CONNECTOR 12P	

FUSE & PROTECTOR

Ref. No.	Part No.	Part Name & Description	Remarks
F1001	K5H202Z00005	FUSE CHIP 32V 2A	⚠
F1001	K5H202Z00003	FUSE CHIP 32V 2A	⚠
F1001	K5H202Z00004	FUSE CHIP 32V 2A	⚠
F1001	K5H2022A0003	FUSE CHIP 32V 2A	⚠
F1002	K5H152Z00006	FUSE CHIP 32V 1.5A	⚠
F1002	K5H152Z00004	FUSE CHIP 32V 1.5A	⚠
F1002	K5H152Z00005	FUSE CHIP 32V 1.5A	⚠
PR1001	ERJ3GEY0R00X	MGF CHIP 1/16W 0	

TRANSFORMER

Ref. No.	Part No.	Part Name & Description	Remarks
T1001	G5DYA0000042	TRANSFORMER	
T4001	EQQ7QE025Q	TRANSFORMER	

MISCELLANEOUS

Ref. No.	Part No.	Part Name & Description	Remarks
707	VMTS0035	CUSHION,RUBBER	

11.3.2. COLOR ELECTRONIC VIEWFINDER C.B.A.

(Model: B)

COMPARISON CHART OF MODELS & MARKS

MODEL	MARK
PV-L452	A
PV-L652	B

INTEGRATED CIRCUITS

Ref. No.	Part No.	Part Name & Description	Remarks
IC901	AN12500A-V	IC, LINEAR	
IC902	C0JBAF000161	IC, CMOS STANDARD LOGIC	E.S.D.

TRANSISTORS

Ref. No.	Part No.	Part Name & Description	Remarks
Q901	2SD1819A0L	TRANSISTOR SI NPN CHIP	
Q901	B1ABCF000020	TRANSISTOR SI NPN CHIP	

DIODES

Ref. No.	Part No.	Part Name & Description	Remarks
D901	NSCW100	LIGHT EMITTING DIODE	

RESISTORS

Ref. No.	Part No.	Part Name & Description	Remarks
R902	ERJ3GEYJ102V	MGF CHIP 1/16W 1K	
R903	ERJ3GEYJ102V	MGF CHIP 1/16W 1K	
R904	ERJ3GEYJ102V	MGF CHIP 1/16W 1K	
R907	ERJ3GEY0R00V	MGF CHIP 1/16W 0	
R908	ERJ3GEY0R00V	MGF CHIP 1/16W 0	
R909	ERJ3GEY0R00V	MGF CHIP 1/16W 0	
R910	ERJ3GEYJ271V	MGF CHIP 1/16W 270	
R911	ERJ3GEYJ153V	MGF CHIP 1/16W 15K	
R912	ERJ3GEYJ113V	MGF CHIP 1/16W 11K	
R913	ERJ3GEY0R00V	MGF CHIP 1/16W 0	
R915	ERJ3GEY0R00V	MGF CHIP 1/16W 0	
R916	ERJ3GEYJ101V	MGF CHIP 1/16W 100	
R917	ERJ3GEYJ101V	MGF CHIP 1/16W 100	
R918	ERJ3GEYJ101V	MGF CHIP 1/16W 100	
R919	ERJ3GEY0R00V	MGF CHIP 1/16W 0	
R920	D0HB273ZA002	MGF CHIP 1/16W 27K	
R921	D0HB102ZA002	MGF CHIP 1/16W 1K	
R922	D0HB223ZA002	MGF CHIP 1/16W 22K	
R937	ERJ3GEYJ103V	MGF CHIP 1/16W 10K	
R939	ERJ3GEYJ102V	MGF CHIP 1/16W 1K	
R940	ERJ3GEYJ102V	MGF CHIP 1/16W 1K	
R941	ERJ3GEYJ102V	MGF CHIP 1/16W 1K	
R942	ERJ3GEYJ220V	MGF CHIP 1/16W 22	
R955	ERJ3GEY0R00V	MGF CHIP 1/16W 0	
R957	D0HB243ZA002	MGF CHIP 1/16W 24K	
R958	D0HB243ZA002	MGF CHIP 1/16W 24K	
R960	D0HB273ZA002	MGF CHIP 1/16W 27K	
R961	D0HB273ZA002	MGF CHIP 1/16W 27K	

CAPACITORS

Ref. No.	Part No.	Part Name & Description	Remarks
C905	ECEV1EA4R7S	ELECTROLYTIC CHIP 25V 4.7UF	
C908	ECJ1VF1C104Z	C CHIP 16V 0.1UF	
C910	ECJ1VB1H152K	C CHIP 50V 1500PF	
C911	ECJ1VF1A105Z	C CHIP 10V 1UF	
C912	F3F0J226A001	ELECTROLYTIC CHIP 6.3V 22UF	
C913	ECJ1VB1C104K	C CHIP 16V 0.1UF	
C914	ECJ1VB1C104K	C CHIP 16V 0.1UF	
C915	ECJ2YB0J225K	C CHIP 6.3V 2.2UF	
C916	ECJ1VB1H152K	C CHIP 50V 1500PF	
C917	ECST0JY475	TANTALUM CHIP 6.3V 4.7UF	
C918	ECJ2YF1C225Z	C CHIP 16V 2.2UF	
C919	ECJ1VB1C104K	C CHIP 16V 0.1UF	
C920	ECJ1VF1C104Z	C CHIP 16V 0.1UF	
C923	ECJ2YF1C225Z	C CHIP 16V 2.2UF	
C924	ECJ2YF1C225Z	C CHIP 16V 2.2UF	
C927	ECJ2VB1C104K	C CHIP 16V 0.1UF	
C928	ECJ1VF1C104Z	C CHIP 16V 0.1UF	
C929	ECEV1CA220S	ELECTROLYTIC CHIP 16V 22UF	
C930	F1J1A1050002	C CHIP 10V 1UF	
C931	ECJ1VC1H271J	C CHIP 50V 270PF	
C932	ECJ1VC1H561J	C CHIP 50V 560PF	

COILS

Ref. No.	Part No.	Part Name & Description	Remarks
L902	G1C150J00005	COIL CHIP 15UH	
L905	G1C150J00005	COIL CHIP 15UH	

PIN HEADERS

Ref. No.	Part No.	Part Name & Description	Remarks
P901	K1KA14A00168	CONNECTOR 14P	

FPC CONNECTOR

Ref. No.	Part No.	Part Name & Description	Remarks
FP901	K1MN22A00024	CONNECTOR 22P	

11.3.3. LIQUID CRYSTAL DISPLAY C.B.A.

COMPARISON CHART OF MODELS & MARKS

MODEL	MARK
PV-L452	A
PV-L652	B

INTEGRATED CIRCUITS

Ref. No.	Part No.	Part Name & Description	Remarks
IC9001	AN2545FHQ	IC, LINEAR	
IC9001	AN2545NFHQ	IC, LINEAR	
IC9002	C0ABAB000001	IC, LINEAR	

TRANSISTORS

Ref. No.	Part No.	Part Name & Description	Remarks
Q1203	UNR511200L	TRANSISTOR SI PNP CHIP	
Q1203	B1GDCFLL0012	TRANSISTOR SI PNP CHIP	
Q1206	2SB1218A0L	TRANSISTOR SI PNP CHIP	
Q1206	B1ADCF000063	TRANSISTOR SI PNP CHIP	
Q1207	UNR521200L	TRANSISTOR SI NPN CHIP	
Q1207	B1GBCFLL0012	TRANSISTOR SI NPN CHIP	
Q1208	2SD1819A0L	TRANSISTOR SI NPN CHIP	
Q1208	B1ABCF000020	TRANSISTOR SI NPN CHIP	
Q1209	2SD1819A0L	TRANSISTOR SI NPN CHIP	
Q1209	B1ABCF000020	TRANSISTOR SI NPN CHIP	
Q1211	UNR521300L	TRANSISTOR SI NPN CHIP	
Q1211	B1GBCFNN0009	TRANSISTOR SI NPN CHIP	
Q1213	B1ABCF000098	TRANSISTOR SI NPN CHIP	
Q1213	B1ABCF000099	TRANSISTOR SI NPN CHIP	
Q1214	2SD1819A0L	TRANSISTOR SI NPN CHIP	
Q1214	B1ABCF000020	TRANSISTOR SI NPN CHIP	
Q1215	UNR521200L	TRANSISTOR SI NPN CHIP	
Q1215	B1GBCFLL0012	TRANSISTOR SI NPN CHIP	
Q9004	UNR521200L	TRANSISTOR SI NPN CHIP (B)	
Q9004	B1GBCFLL0012	TRANSISTOR SI NPN CHIP (B)	
Q9005	UNR511400L	TRANSISTOR SI NPN CHIP (B)	
Q9005	B1GDCFJN0011	TRANSISTOR SI PNP CHIP (B)	
Q9051	2SD11190RL	TRANSISTOR SI NPN CHIP	⚠
Q9051	B1ABPC000007	TRANSISTOR SI NPN CHIP	⚠
Q9052	2SD11190RL	TRANSISTOR SI NPN CHIP	⚠
Q9052	B1ABPC000007	TRANSISTOR SI NPN CHIP	⚠
Q9053	2SB1218A0L	TRANSISTOR SI PNP CHIP	
Q9053	B1ADCF000063	TRANSISTOR SI PNP CHIP	

DIODES

Ref. No.	Part No.	Part Name & Description	Remarks
D1203	MAZ80560LL	DIODE ZENER CHIP 5.6V	
D1206	MAZ80680ML	DIODE ZENER CHIP 6.8V	

RESISTORS

Ref. No.	Part No.	Part Name & Description	Remarks
R1215	ERJ3GEYJ473V	MGF CHIP 1/16W 47K	
R1216	ERJ3GEYJ223V	MGF CHIP 1/16W 22K	
R1217	ERJ3GEYJ102V	MGF CHIP 1/16W 1K	
R1218	ERJ3GEYJ223V	MGF CHIP 1/16W 22K	
R1219	ERJ3GEYJ561V	MGF CHIP 1/16W 560	
R1220	ERJ3GEYJ562V	MGF CHIP 1/16W 5.6K	
R1222	ERJ3GEYJ393V	MGF CHIP 1/16W 39K	
R1225	ERJ3GEYJ103V	MGF CHIP 1/16W 10K	
R1226	ERJ3GEYJ473V	MGF CHIP 1/16W 47K	
R9001	ERJ3GEYJ473V	MGF CHIP 1/16W 47K	
R9004	ERJ3GEYJ102V	MGF CHIP 1/16W 1K	
R9005	ERJ3GEYJ102V	MGF CHIP 1/16W 1K	
R9006	ERJ3GEYJ102V	MGF CHIP 1/16W 1K	
R9010	ERJ8GEYJ101V	MGF CHIP 1/16W 100	
R9011	ERJ8GEYJ101V	MGF CHIP 1/16W 100	
R9012	ERJ8GEYJ101V	MGF CHIP 1/16W 100	
R9013	ERJ3GEYJ561V	MGF CHIP 1/16W 560	
R9014	ERJ3GEYJ153V	MGF CHIP 1/16W 15K	
R9015	ERJ3GEYJ123V	MGF CHIP 1/16W 12K	
R9016	ERJ3GEYJ103V	MGF CHIP 1/16W 10K	
R9017	ERJ6GEY0R00V	MGF CHIP 1/10W 0	
R9018	ERJ3GEY0R00V	MGF CHIP 1/16W 0	
R9019	ERJ3GEY0R00V	MGF CHIP 1/16W 0	
R9020	ERJ3GEYJ101V	MGF CHIP 1/16W 100	
R9021	ERJ6GEYJ101V	MGF CHIP 1/10W 100	
R9022	ERJ3GEYJ101V	MGF CHIP 1/16W 100	
R9023	ERJ3GEYJ473V	MGF CHIP 1/16W 47K	
R9024	ERJ3GEYJ104V	MGF CHIP 1/16W 100K	
R9025	ERJ6GEYJ682V	MGF CHIP 1/10W 6.8K	
R9026	ERJ3GEYJ473V	MGF CHIP 1/16W 47K	
R9027	ERJ3GEYJ472V	MGF CHIP 1/16W 4.7K	
R9028	ERJ3GEYJ223V	MGF CHIP 1/16W 22K	
R9029	ERJ3GEYJ113V	MGF CHIP 1/16W 11K (B)	
R9029	ERJ3GEYJ123V	MGF CHIP 1/16W 12K (A)	
R9030	ERJ3GEYJ103V	MGF CHIP 1/16W 10K	
R9031	ERJ3GEYJ103V	MGF CHIP 1/16W 10K	
R9032	ERJ3GEYJ153V	MGF CHIP 1/16W 15K	
R9033	ERJ3GEYJ333V	MGF CHIP 1/16W 33K (B)	
R9051	ERJ3GEYJ222V	MGF CHIP 1/16W 2.2K	
R9052	ERJ8GEYJ102V	MGF CHIP 1/8W 1K (A)	
R9054	ERJ3GEYJ222V	MGF CHIP 1/16W 2.2K	
R9056	ERJ3GEY0R00V	MGF CHIP 1/16W 0	

CAPACITORS

Ref. No.	Part No.	Part Name & Description	Remarks
C1206	ECJ1VB1C104K	C CHIP 16V 0.1UF	
C1207	ECJ1VB1C104K	C CHIP 16V 0.1UF	
C1208	ECJ1VB1C104K	C CHIP 16V 0.1UF	
C1209	ECJ1VB1C104K	C CHIP 16V 0.1UF	
C1210	ECJ1VB1H103K	C CHIP 50V 0.01UF	
C1211	ECJ1VB1C104K	C CHIP 16V 0.1UF	
C9003	ECST0JY475	TANTALUM CHIP 6.3V 4.7UF	
C9007	ECJ1VF1A105Z	C CHIP 10V 1UF	
C9008	ECJ1VF1C104Z	C CHIP 16V 0.1UF	
C9009	F3F0J226A001	ELECTROLYTIC CHIP 6.3V 22UF	
C9010	ECJ1VB1H681K	C CHIP 50V 680PF	
C9011	ECJ1VB1C104K	C CHIP 16V 0.1UF	
C9012	ECJ1VB1C104K	C CHIP 16V 0.1UF	
C9013	VCUSJBJ225KB	C CHIP 6.3V 2.2UF	
C9014	ECJ1VB1H152K	C CHIP 50V 1500PF	
C9015	ECST0JY475	TANTALUM CHIP 6.3V 4.7UF	
C9016	ECST0JY106	TANTALUM CHIP 6.3V 10UF	
C9017	ECJ2YF1C225Z	C CHIP 16V 2.2UF	
C9018	ECJ1VB1C104K	C CHIP 16V 0.1UF	
C9019	ECST1CY475	TANTALUM CHIP 16V 4.7UF	
C9020	ECJ2YF1C225Z	C CHIP 16V 2.2UF	
C9021	ECJ2YF1C225Z	C CHIP 16V 2.2UF	
C9022	ECJ2YF1C225Z	C CHIP 16V 2.2UF	
C9023	F1K1C2250005	C CHIP 16V 2.2UF	
C9024	ECJ2YF1C225Z	C CHIP 16V 2.2UF	
C9025	ECJ1VC1H151J	C CHIP 50V 150PF	
C9026	ECJ2YF1C225Z	C CHIP 16V 2.2UF	
C9027	ECJ1VB1C104K	C CHIP 16V 0.1UF	
C9028	F1J1C1050011	C CHIP 16V 1UF	
C9029	ECJ1VF1C104Z	C CHIP 16V 0.1UF	
C9031	ECST0JY106	TANTALUM CHIP 6.3V 10UF	
C9032	ECJ1VF1C104Z	C CHIP 16V 0.1UF	
C9051	ECUV1A106KBP	C CHIP 10V 10UF	
C9052	ECHU1H273JB5	POLYESTER CHIP 50V 0.027UF	
C9053	LSCUCAD150J	C CHIP 2KV 15PF	
C9054	ECJ1VF1C104Z	C CHIP 16V 0.1UF	
C9055	LSCUCAD150J	C CHIP 2KV 15PF	

COILS

Ref. No.	Part No.	Part Name & Description	Remarks
L1202	ELJFA150KF	COIL CHIP 15UH	
L1203	G1A100ZA0002	CHOKE COIL 10UH	
L9001	G1C150J00005	COIL CHIP 15UH	
L9003	G1C150J00005	COIL CHIP 15UH	
L9005	G1C150J00005	COIL CHIP 15UH	
L9006	G1C150J00005	COIL CHIP 15UH	
L9007	G1C150J00005	COIL CHIP 15UH	
L9051	G1C680M00005	CHOKE COIL 68UH	⚠

FPC CONNECTOR

Ref. No.	Part No.	Part Name & Description	Remarks
FP1201	K1MN22B00046	CONNECTOR 22P	
FP9001	K1MN24B00077	CONNECTOR 24P (A)	
FP9002	K1MN24B00077	CONNECTOR 24P (B)	

SWITCHES

Ref. No.	Part No.	Part Name & Description	Remarks
SW9001	EVQ12A05R		
SW9002	EVQ12A05R		

FUSE & PROTECTOR

Ref. No.	Part No.	Part Name & Description	Remarks
PR9051	K5H1022A0003	FUSE 32V 1A	
PR9051	K5H102Z00004	FUSE 32V 1A	

TRANSFORMER

Ref. No.	Part No.	Part Name & Description	Remarks
T9051	ETJ11K95AM	TRANSFORMER	⚠

MISCELLANEOUS

Ref. No.	Part No.	Part Name & Description	Remarks
706	VMZW0668	INSULATION SHEET,PLASTIC	

12. SCHEMATIC DIAGRAMS FOR PRINTING WITH LETTER SIZE

COLOR EVF SCHEMATIC DIAGRAM (B)

NOTE: For placing a purchase order of the parts, be sure to use the part number listed in the parts list. Do not use the part number on this diagram.

NOTE: FOR SCHEMATIC DIAGRAM AND CIRCUIT BOARD LAYOUT NOTES, REFER TO BEGINNING OF SCHEMATIC SECTION.

COMPARISON CHART OF MODELS & MARKS

MODEL	MARK
PV-L452	A
PV-L652	B
Not Used	PT

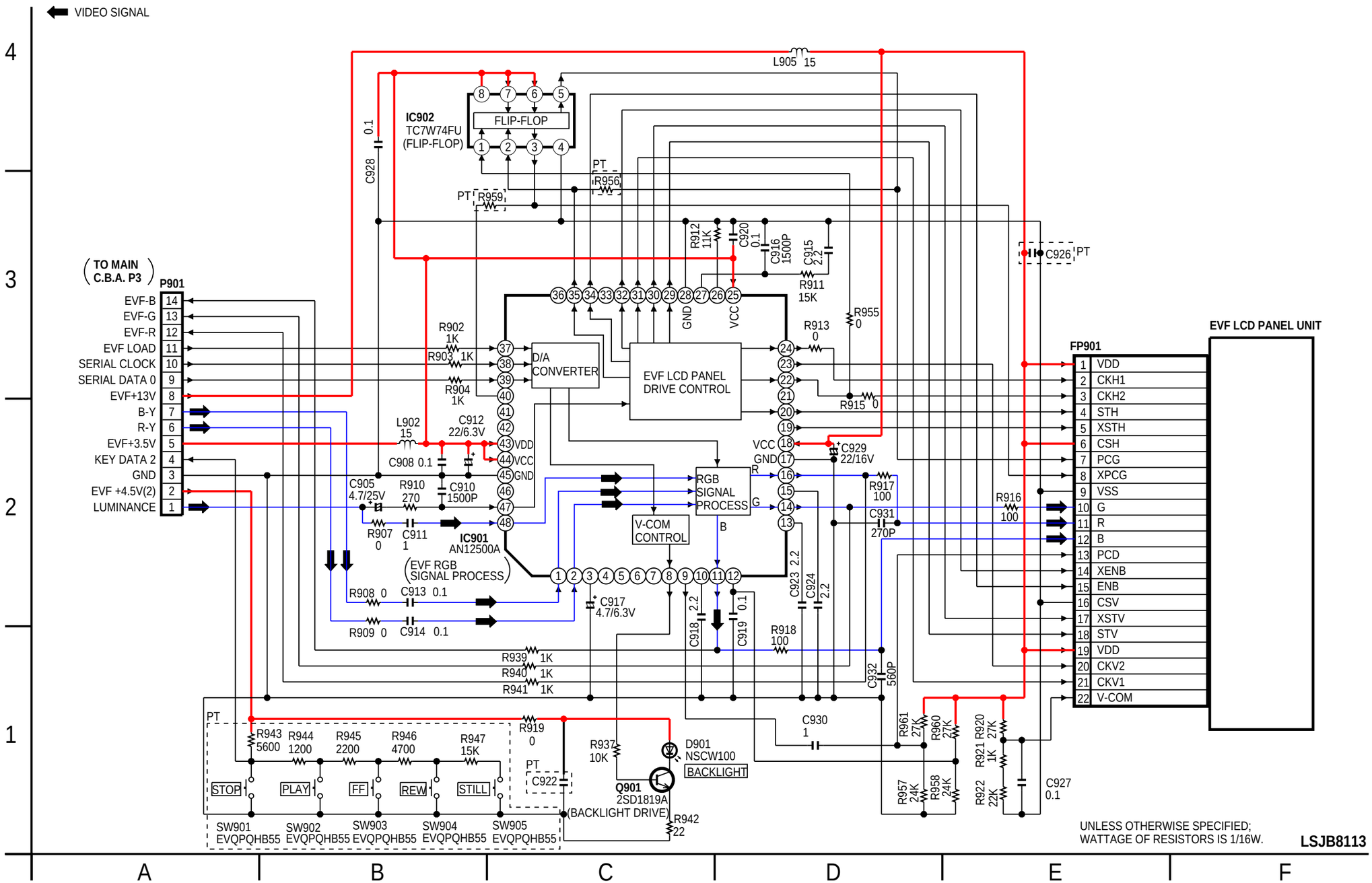

HEAD AMP SCHEMATIC DIAGRAM

NOTE: For placing a purchase order of the parts,
be sure to use the part number listed in the parts list.
Do not use the part number on this diagram.

NOTE:
FOR SCHEMATIC DIAGRAM AND CIRCUIT BOARD LAYOUT NOTES,
REFER TO BEGINNING OF SCHEMATIC SECTION.

COMPARISON CHART OF MODELS & MARKS

MODEL	MARK
PV-L452	A
PV-L652	B
Not Used	PT

"FOR REFERENCE ONLY"

NOTE:
HEAD AMP IS NOT SERVICEABLE AND IS
SUPPLIED AS A CYLINDER UNIT ONLY FOR REPLACEMENT.

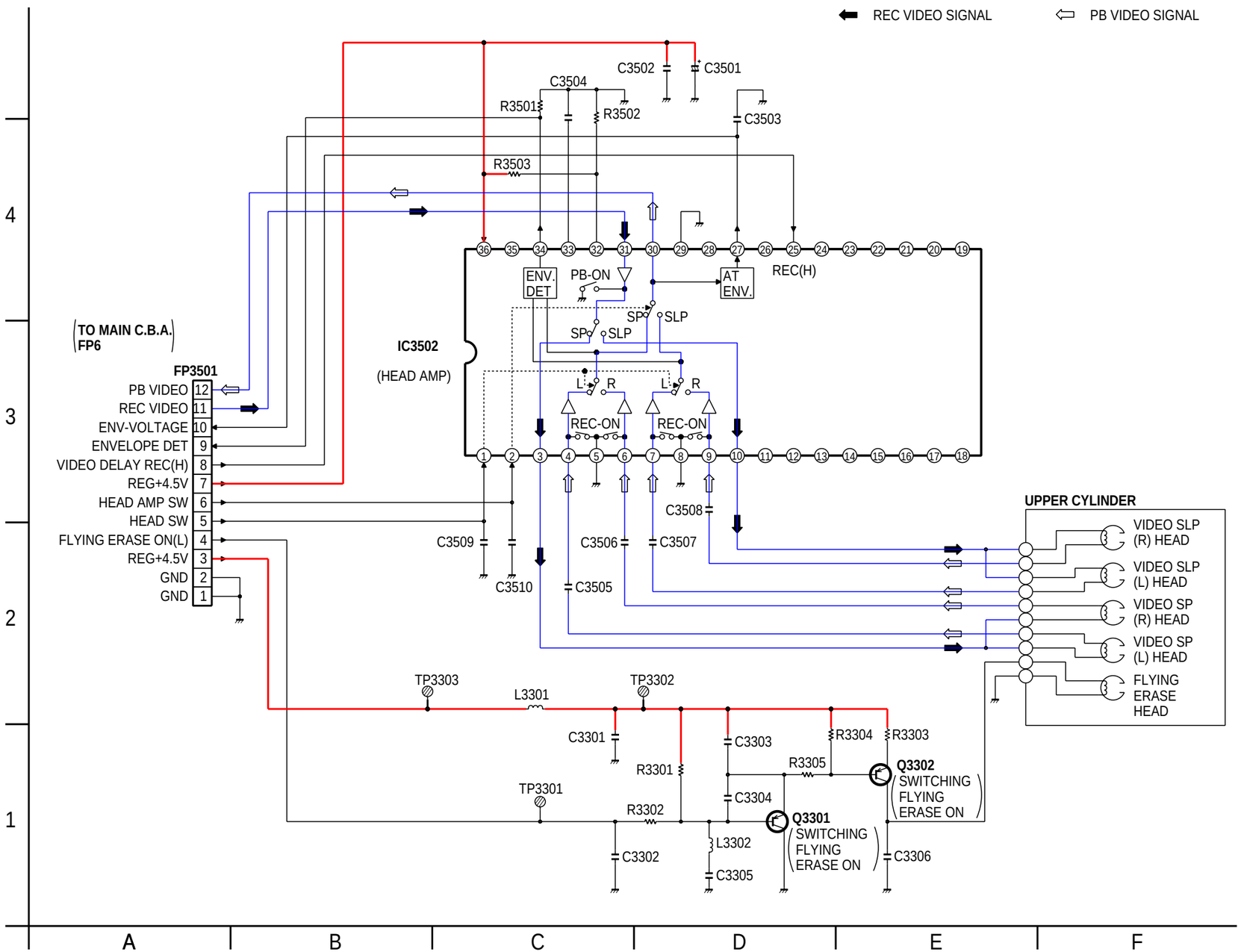

NOTE: For placing a purchase order of the parts,
be sure to use the part number listed in the parts list.
Do not use the part number on this diagram.

NOTE:
FOR SCHEMATIC DIAGRAM AND CIRCUIT BOARD LAYOUT NOTES,
REFER TO BEGINNING OF SCHEMATIC SECTION.

COMPARISON CHART OF MODELS & MARKS

MODEL	MARK
PV-L452	A
PV-L652	B
Not Used	PT

LCD SHAFT UNIT

"FOR REFERENCE ONLY"

NOTE:
LCD SHAFT UNIT IS NOT SERVICEABLE AND IS
SUPPLIED AS A UNIT ONLY FOR REPLACEMENT.

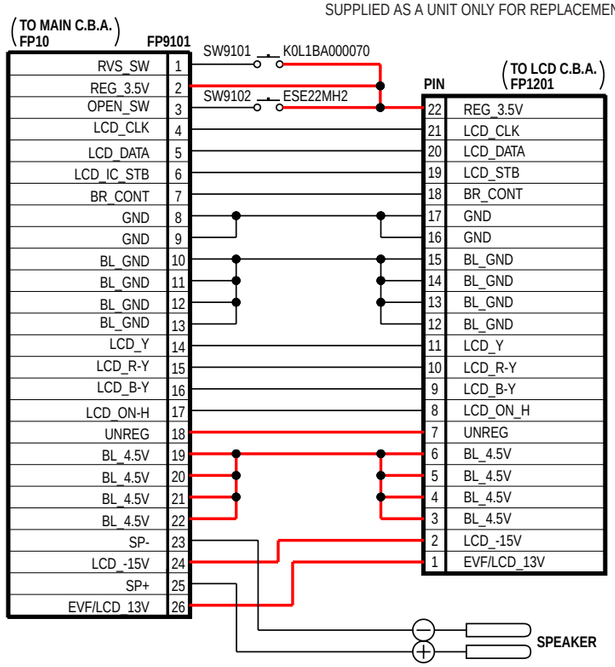

IC6001 KEY VOLTAGE CHART (LCD PANEL MODE) (SW9101,9102)

TERMINAL VOLTAGE (Pin 79 of IC6001)	LCD PANEL MODE	
	NORMAL& REVERSE	OPEN&CLOSE
0V	NORMAL	CLOSE
2.6V	NORMAL	OPEN
1.1V	REVERSE	CLOSE
3.5V	REVERSE	OPEN

SW9101 ON :REVERSE
OFF:NORMAL
SW9102 ON :OPEN
OFF:CLOSE

CCD UNIT

"FOR REFERENCE ONLY"

NOTE:
CCD UNIT IS NOT SERVICEABLE AND IS SUPPLIED
AS A LENS UNIT ONLY FOR REPLACEMENT.

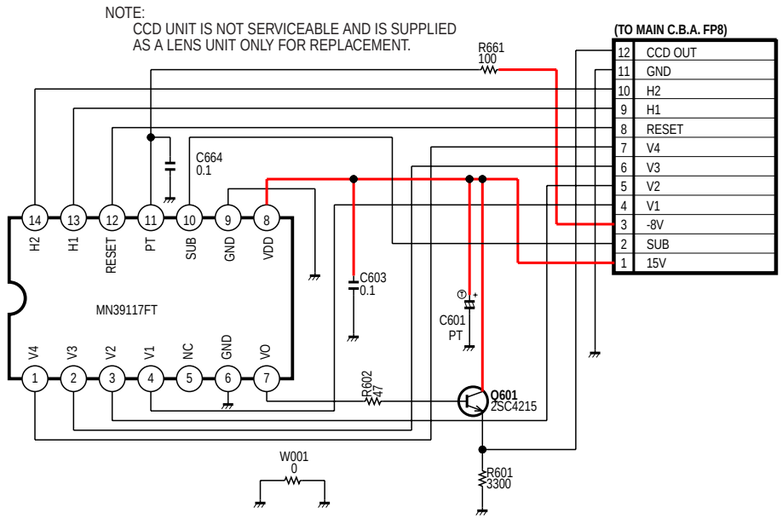

EVF UNIT (A)

"FOR REFERENCE ONLY"

NOTE:
EVF UNIT IS NOT SERVICEABLE AND IS
SUPPLIED AS A UNIT ONLY FOR REPLACEMENT.

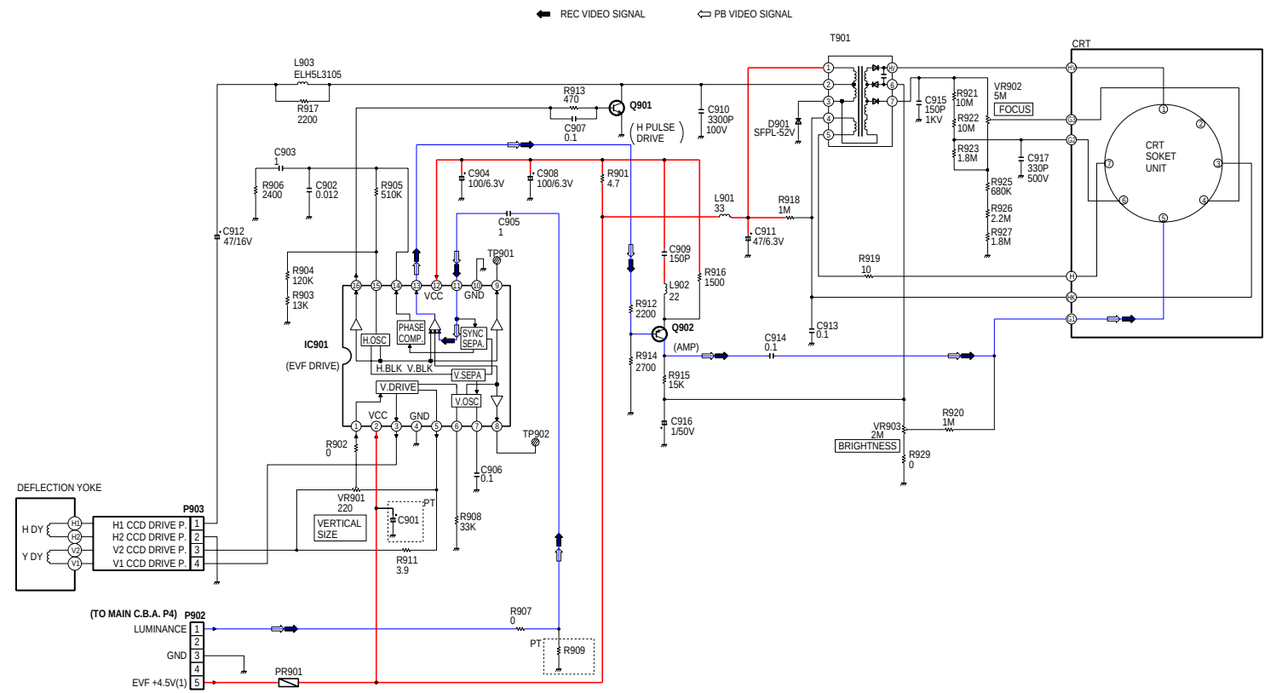

PV-L452, PV-L652
LCD SHAFT UNIT
EVF UNIT
CCD DUNIT

NOTE: For placing a purchase order of the parts, be sure to use the part number listed in the parts list. Do not use the part number on this diagram.

NOTE: FOR SCHEMATIC DIAGRAM AND CIRCUIT BOARD LAYOUT NOTES, REFER TO BEGINNING OF SCHEMATIC SECTION.

COMPARISON CHART OF MODELS & MARKS

MODEL	MARK
PV-L452	A
PV-L652	B
Not Used	PT

TOP OPERATION UNIT

"FOR REFERENCE ONLY"

NOTE: TOP OPERATION UNIT IS NOT SERVICEABLE AND IS SUPPLIED AS A UNIT ONLY FOR REPLACEMENT.

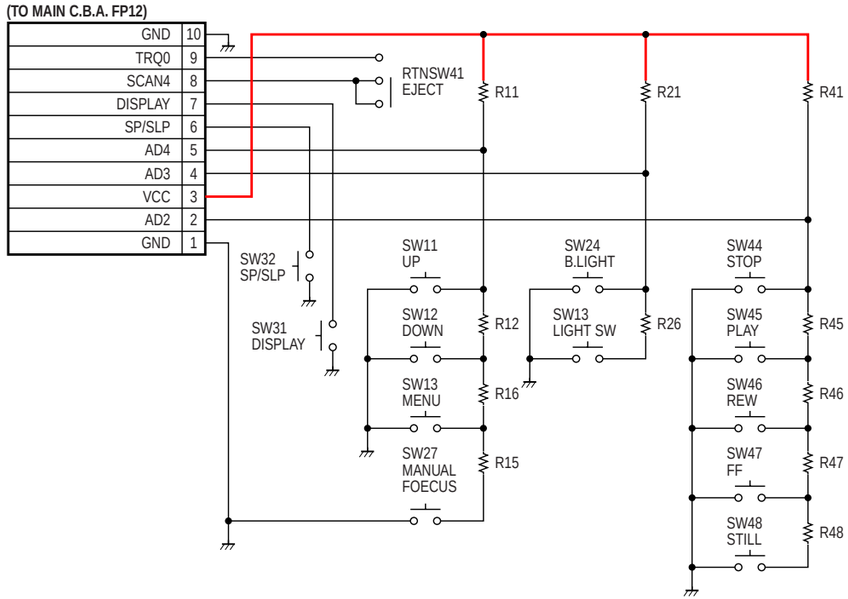

MECHANISM FPC UNIT

"FOR REFERENCE ONLY"

NOTE: MECHANISM FPC UNIT IS NOT SERVICEABLE AND IS SUPPLIED AS A UNIT ONLY FOR REPLACEMENT.

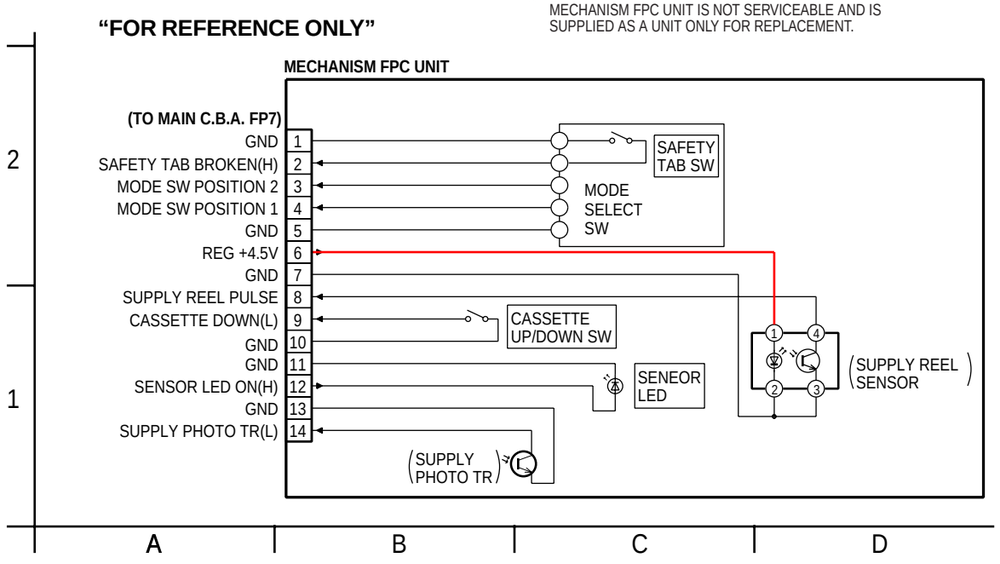

SIDE L FPC UNIT

"FOR REFERENCE ONLY"

NOTE: SIDE L FPC UNIT IS NOT SERVICEABLE AND IS SUPPLIED AS A UNIT ONLY FOR REPLACEMENT.

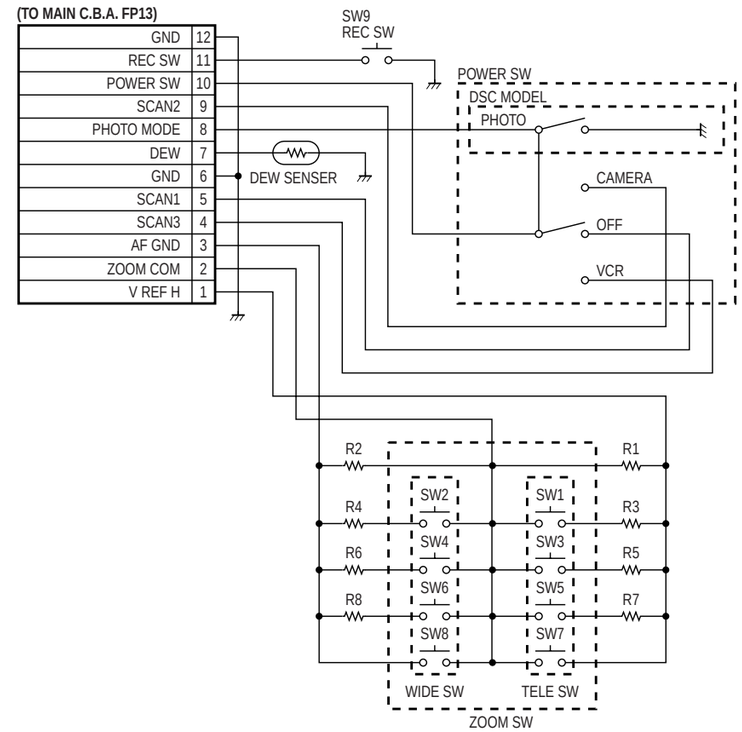

PV-L452, PV-L652
TOP OPERATION UNIT
SIDE L FPC UNIT
MECHANISM FPC UNIT

NOTE: For placing a purchase order of the parts,
be sure to use the part number listed in the parts list.
Do not use the part number on this diagram.

NOTE:
FOR SCHEMATIC DIAGRAM AND CIRCUIT BOARD LAYOUT NOTES,
REFER TO BEGINNING OF SCHEMATIC SECTION.

COMPARISON CHART OF MODELS & MARKS

MODEL	MARK
PV-L452	A
PV-L652	B
Not Used	PT

MIC UNIT

"FOR REFERENCE ONLY"

NOTE:
MIC UNIT IS NOT SERVICEABLE AND IS
SUPPLIED AS A UNIT ONLY FOR REPLACEMENT.

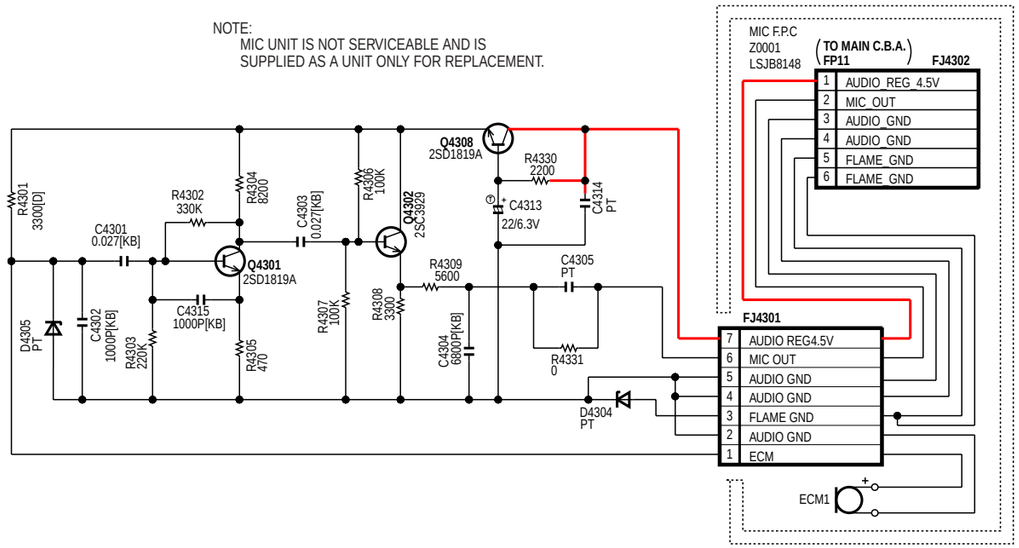

BATTERY CATCHER UNIT

"FOR REFERENCE ONLY"

NOTE:
BATTERY CATCHER UNIT IS NOT SERVICEABLE AND IS
SUPPLIED AS A UNIT ONLY FOR REPLACEMENT.

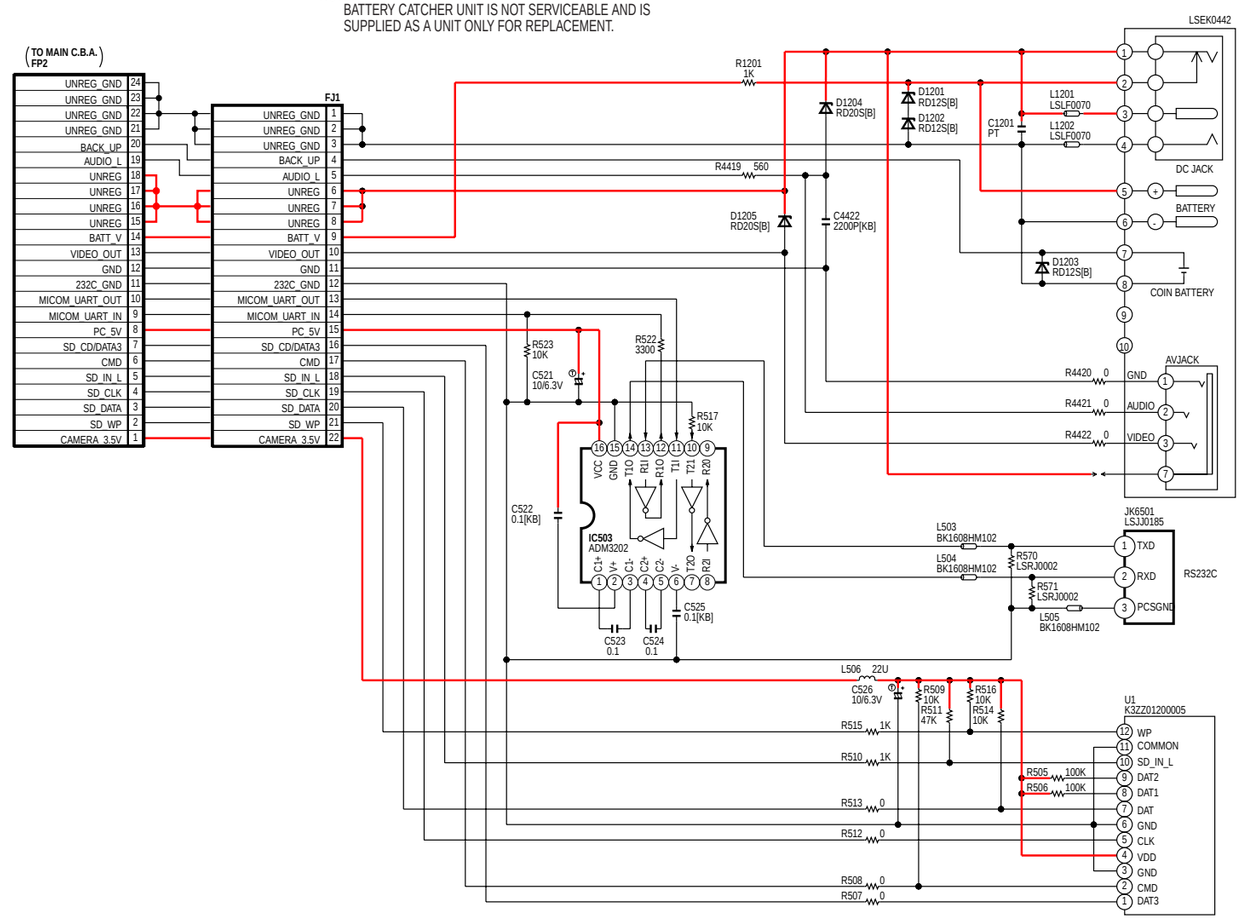

PV-L452, PV-L652
MIC UNIT
BATTERY CATCHER UNIT

INTERCONNECTION SCHEMATIC DIAGRAM

NOTE: For placing a purchase order of the parts, be sure to use the part number listed in the parts list. Do not use the part number on this diagram.

NOTE: FOR SCHEMATIC DIAGRAM AND CIRCUIT BOARD LAYOUT NOTES, REFER TO BEGINNING OF SCHEMATIC SECTION.

COMPARISON CHART OF MODELS & MARKS

MODEL	MARK
PV-L452	A
PV-L652	B
Not Used	PT

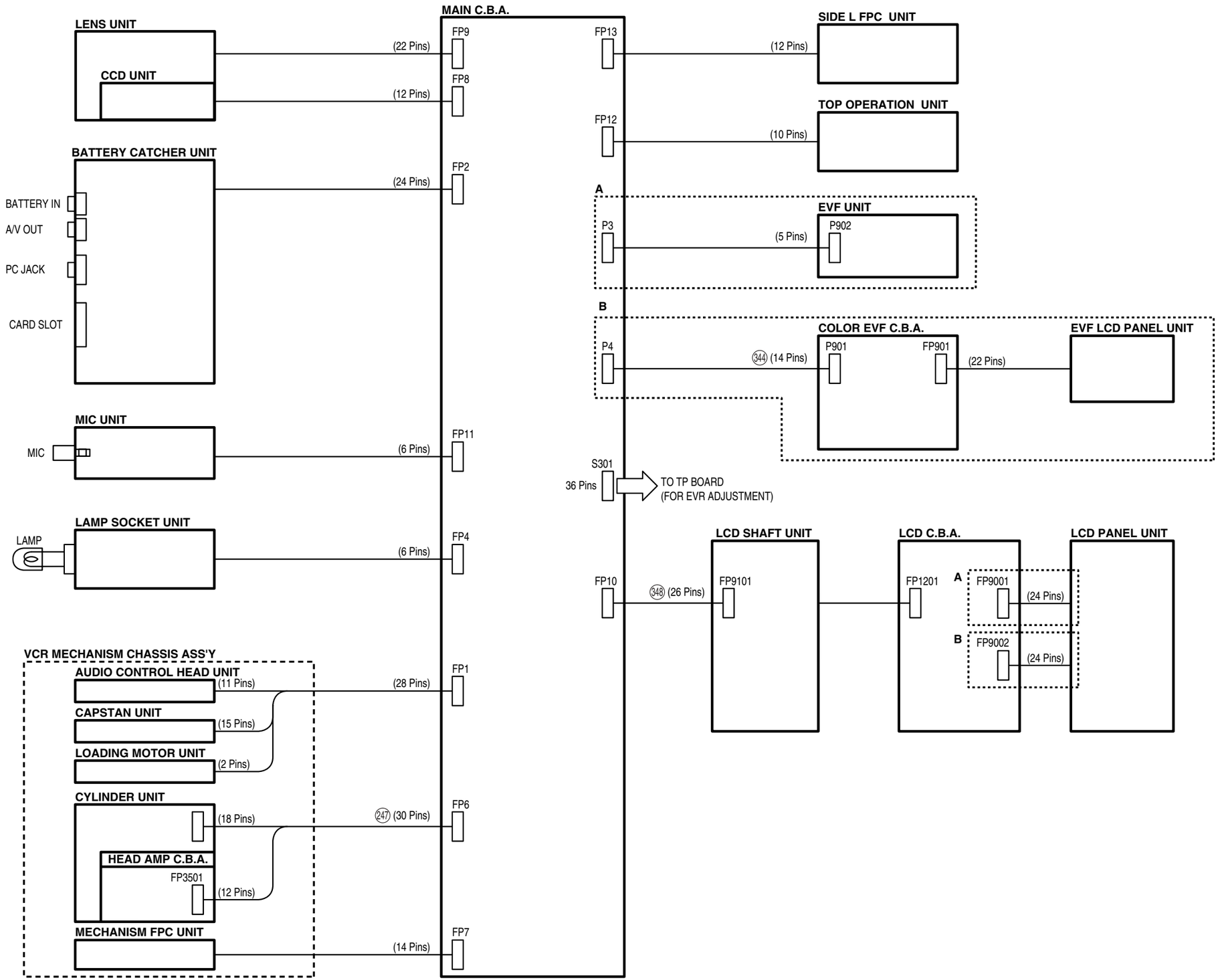

7.2. MAIN SCHEMATIC DIAGRAMS

MAIN I (CONNECTOR) SCHEMATIC DIAGRAM

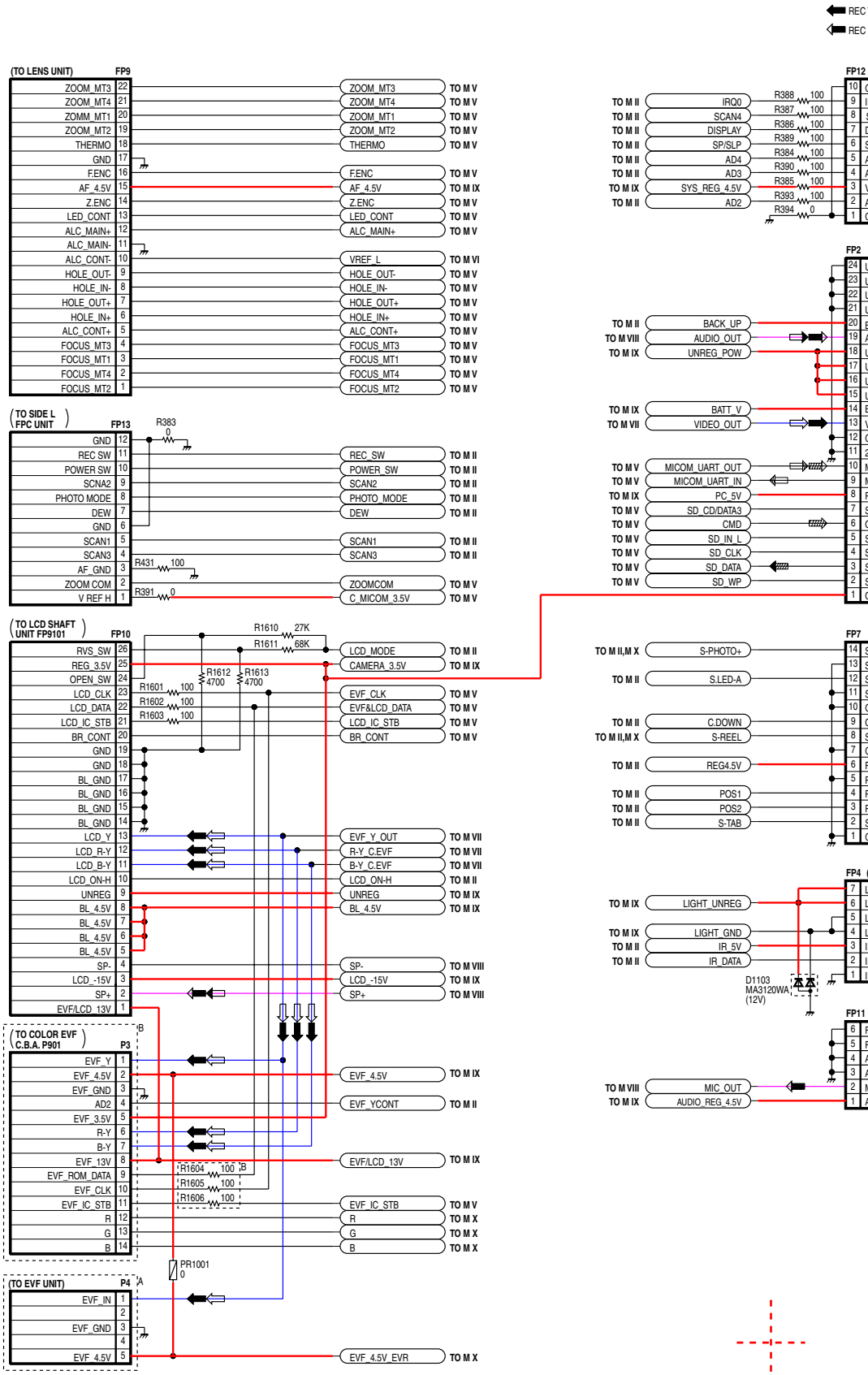

NOTE: For placing a purchase order of the parts, be sure to use the part number listed in the parts list. Do not use the part number on this diagram.

NOTE:
FOR SCHEMATIC DIAGRAM AND CIRCUIT BOARD LAYOUT NOTES, REFER TO BEGINNING OF SCHEMATIC SECTION.

COMPARISON CHART OF MODELS & MARKS

MODEL	MARK
PV-L452	A
PV-L652	B
Not Used	PT

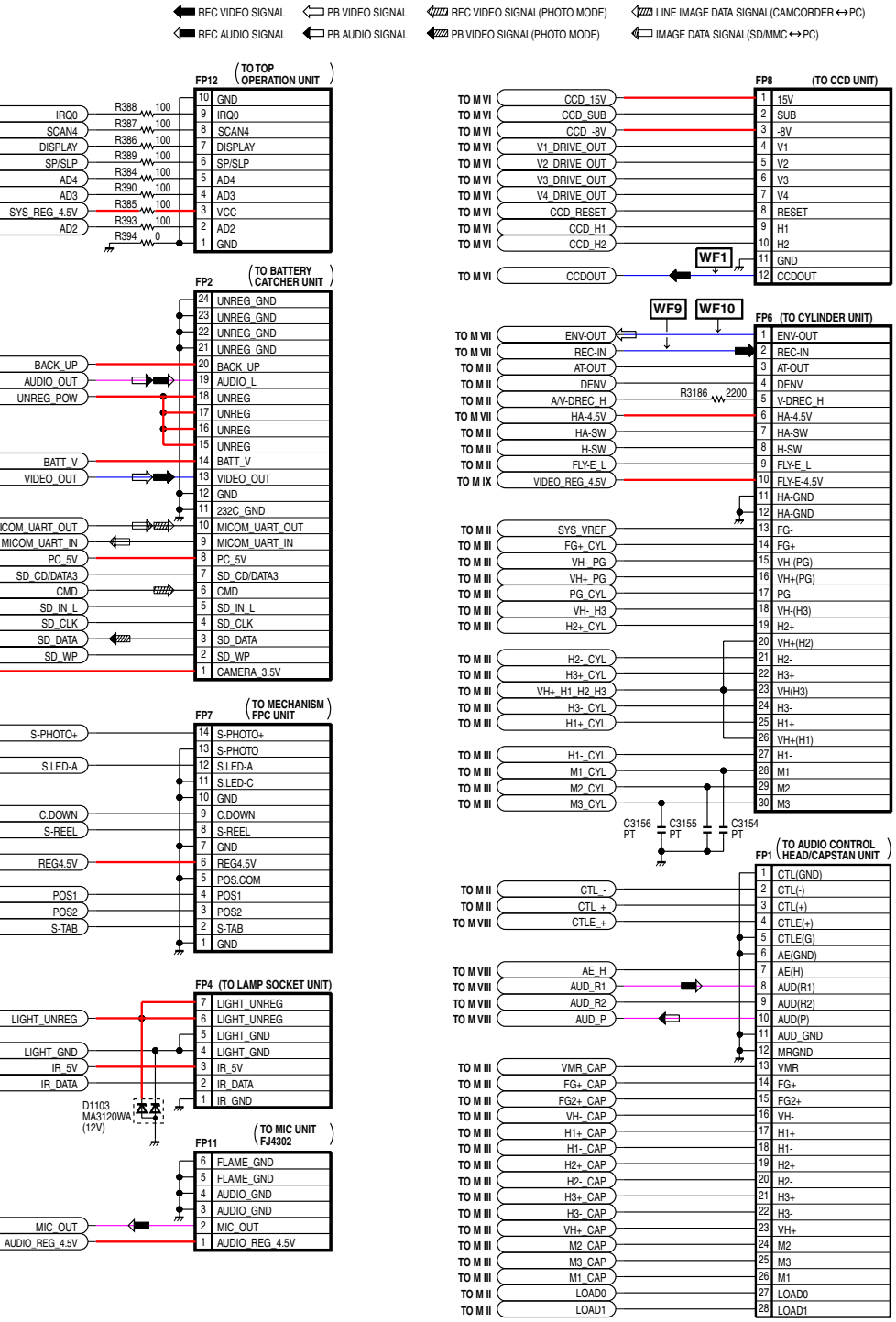

LINK TO SIGNAL WAVEFORM

LSJB8140

PV-L452, PV-L652

MAIN I (CONNECTOR) SCHEMATIC DIAGRAM

MAIN II (SYSTEM CONTROL/SERVO) SCHEMATIC DIAGRAM

***1** NOTE
TO DEFEAT THE SAFETY FUNCTION, CONNECT A DIODE BETWEEN TP6011 AND TP6012, OR SELECT THE H. SAFETY DEFEAT IN SERVICE MODE. REFER TO NOTE1 OF "EXTENSION CABLES FOR SERVICE" IN SERVICE NOTES SECTION FOR MORE INFORMATION.

***2** IC501 and IC6001 replacement note:
IC501 and IC6001 are supplied together only as a Microcontroller Kit (LSI
Microcontroller Kit consists of IC6001, IC501, and Instruction Sheet.
When replacing either IC6001 or IC501, be sure to replace both IC6001 a
When R6001 is found on the Main C.B.A., be sure to remove it at the sam
Otherwise, normal operation may not be possible.

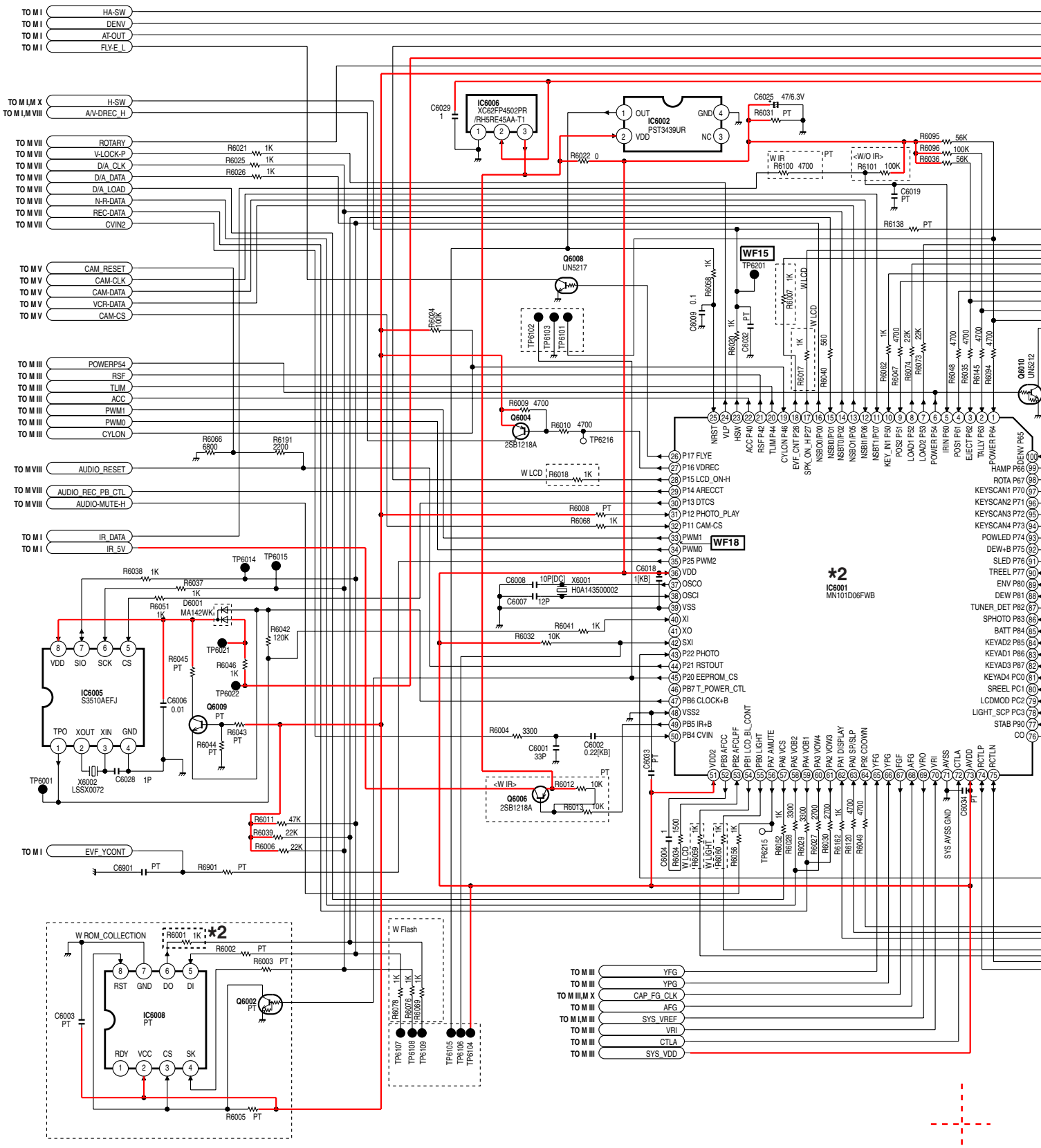

:
ther only as a Microcontroller Kit (LSUC0005).
1, IC501, and Instruction Sheet.
01, be sure to replace both IC6001 and IC501.
.B.A., be sure to remove it at the same time.
t be possible.

NOTE: For placing a purchase order of the parts, be sure to use the part number listed in the parts list. Do not use the part number on this diagram.

NOTE:
FOR SCHEMATIC DIAGRAM AND CIRCUIT BOARD LAYOUT NOTES, REFER TO BEGINNING OF SCHEMATIC SECTION.

COMPARISON CHART OF MODELS & MARKS

MODEL	MARK
PV-L452	A
PV-L652	B
Not Used	PT

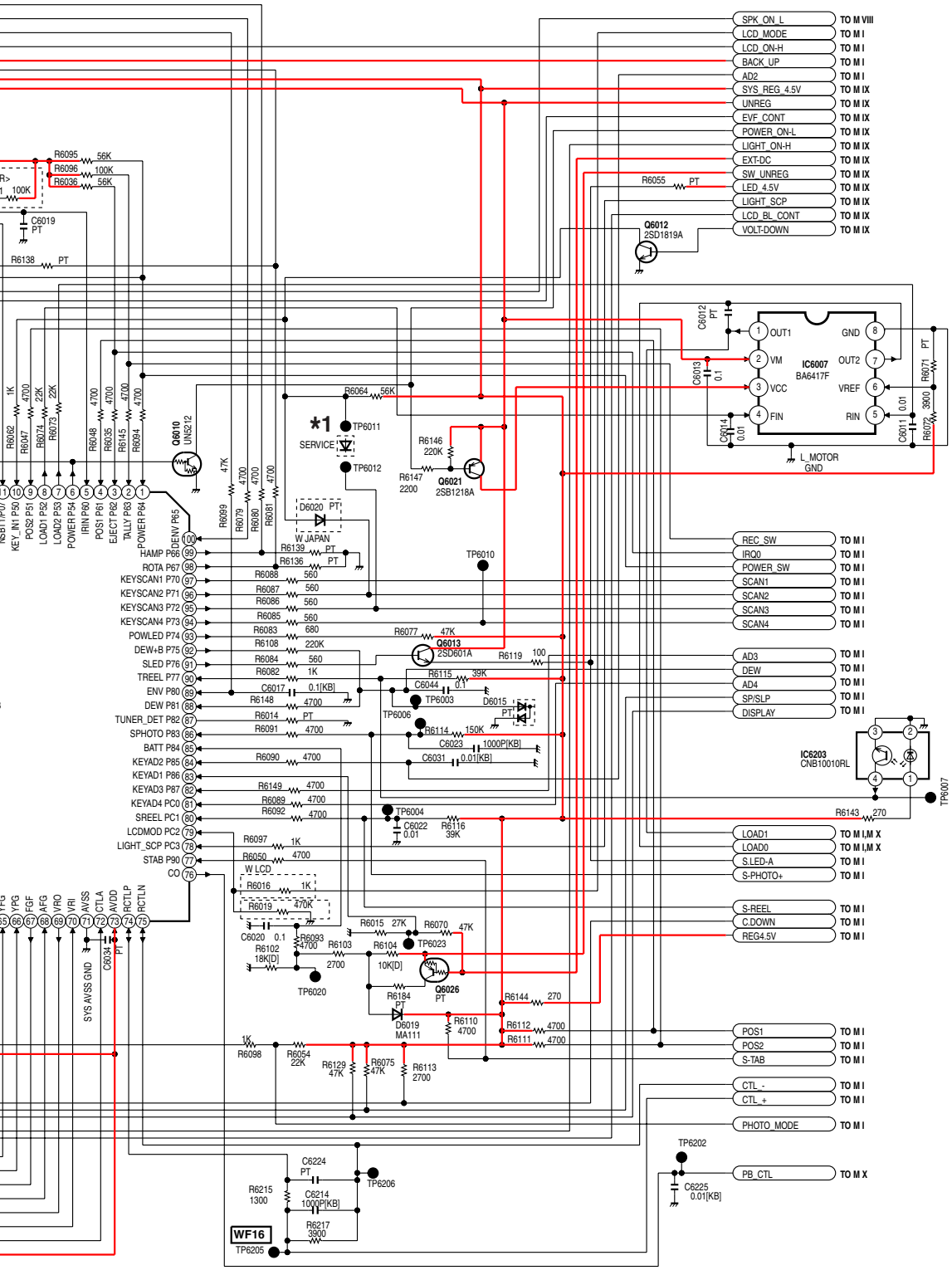

IC6001 KEY VOLTAGE CHART

(VCR MODE)

TERMINAL VOLTAGE	OPERATION BUTTON		
	KEY DATA 2 (PIN 84)	KEY DATA 3 (PIN 82)	KEY DATA 4 (PIN 81)
3.42~3.78V	STILL	---	---
2.52~2.88V	FF/ SEARCH	---	---
1.62~1.98V	REW/ SEARCH	---	MENU
0.72~1.08V	PLAY	---	DOWN
0~0.18V	STOP	---	UP

(CAMERA EIS MODE)

TERMINAL VOLTAGE	OPERATION BUTTON		
	KEY DATA 2 (PIN 84)	KEY DATA 3 (PIN 82)	KEY DATA 4 (PIN 81)
3.42~3.78V	STILL/ STROBE	---	---
2.52~2.88V	D.ZOOM	---	MANUAL FORCUS
1.62~1.98V	FADE	---	MENU
0.72~1.08V	---	LIGHT	DOWN
0~0.18V	EIS	B.LIGHT	UP

(CAMERA WIPE MODE)

TERMINAL VOLTAGE	OPERATION BUTTON		
	KEY DATA 2 (PIN 84)	KEY DATA 3 (PIN 82)	KEY DATA 4 (PIN 81)
3.42~3.78V	START	---	---
2.52~2.88V	SELECT+	---	MANUAL FORCUS
1.62~1.98V	SELECT-	---	MENU
0.72~1.08V	MODE	LIGHT	DOWN
0~0.18V	TO CAMERA EIS MODE	B.LIGHT	UP

(PHOTO REC MODE)

TERMINAL VOLTAGE	OPERATION BUTTON		
	KEY DATA 2 (PIN 84)	KEY DATA 3 (PIN 82)	KEY DATA 4 (PIN 81)
3.42~3.78V	---	---	---
2.52~2.88V	---	---	MANUAL FORCUS
1.62~1.98V	---	---	MENU
0.72~1.08V	TO PHOTO THUMBNAIL MODE	LIGHT	DOWN
0~0.18V	---	B.LIGHT	UP

(PHOTO THUMBNAIL MODE)

TERMINAL VOLTAGE	OPERATION BUTTON		
	KEY DATA 2 (PIN 84)	KEY DATA 3 (PIN 82)	KEY DATA 4 (PIN 81)
3.42~3.78V	---	---	---
2.52~2.88V	SELECT+	---	---
1.62~1.98V	SELECT-	---	---
0.72~1.08V	M.PLAY	LIGHT	---
0~0.18V	TO PHOTO REC MODE	B.LIGHT	---

(PHOTO PLAY MODE)

TERMINAL VOLTAGE	OPERATION BUTTON		
	KEY DATA 2 (PIN 84)	KEY DATA 3 (PIN 82)	KEY DATA 4 (PIN 81)
3.42~3.78V	---	---	---
2.52~2.88V	SELECT+	---	---
1.62~1.98V	SELECT-	---	MENU
0.72~1.08V	---	LIGHT	DOWN
0~0.18V	TO PHOTO THUMBNAIL MODE	---	UP

LINK TO SIGNAL WAVEFORM

LSJB8140

PV-L452, PV-L652

MAIN II (SYSTEM CONTROL/SERVO) SCHEMATIC DIAGRAM

MAIN III (CYLINDER/ CAPSTAN DRIVE) SCHEMATIC DIAGRAM

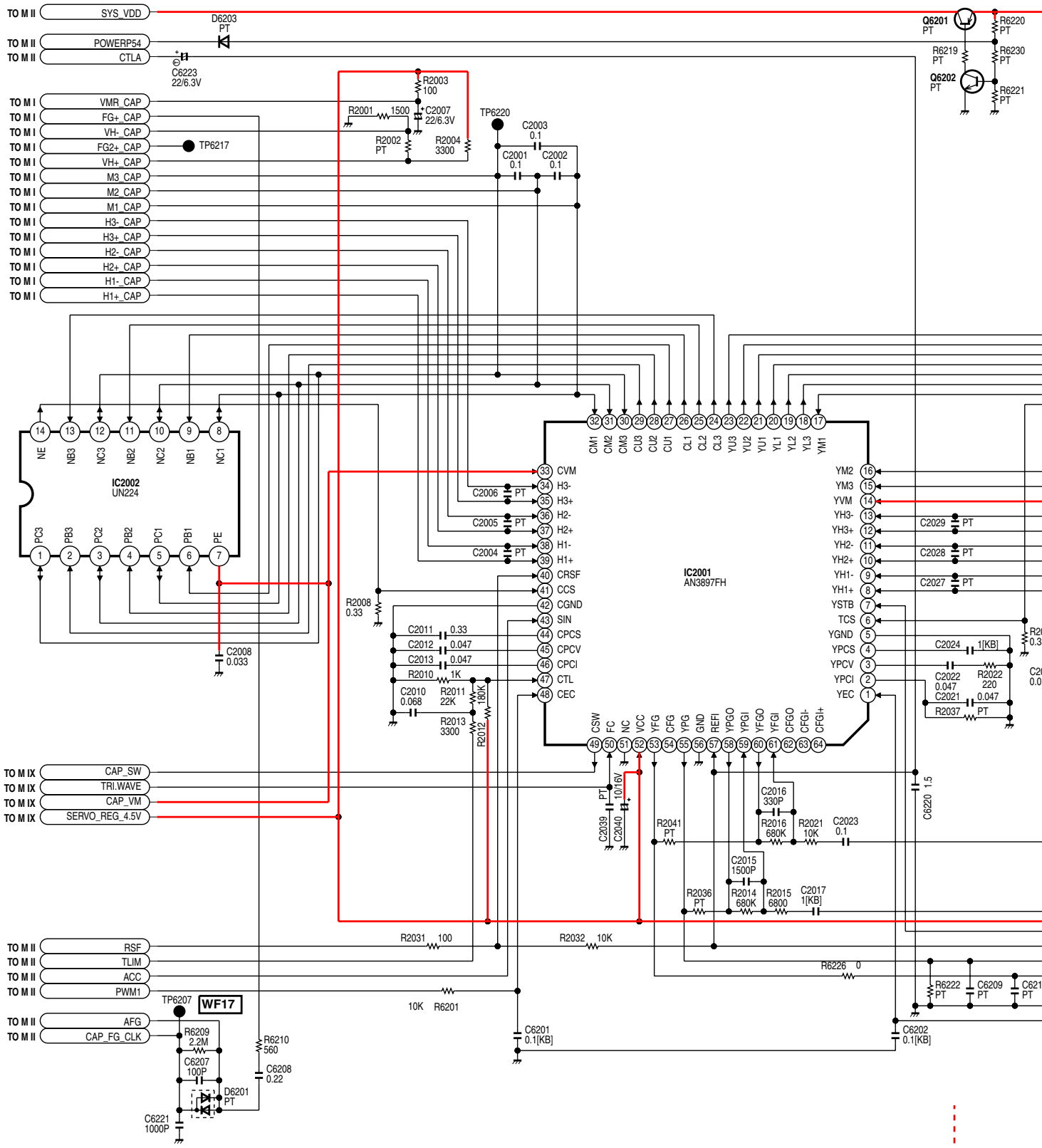

NOTE: For placing a purchase order of the parts, be sure to use the part number listed in the parts list. Do not use the part number on this diagram.

NOTE:
FOR SCHEMATIC DIAGRAM AND CIRCUIT BOARD LAYOUT NOTES, REFER TO BEGINNING OF SCHEMATIC SECTION.

COMPARISON CHART OF MODELS & MARKS

MODEL	MARK
PV-L452	A
PV-L652	B
Not Used	PT

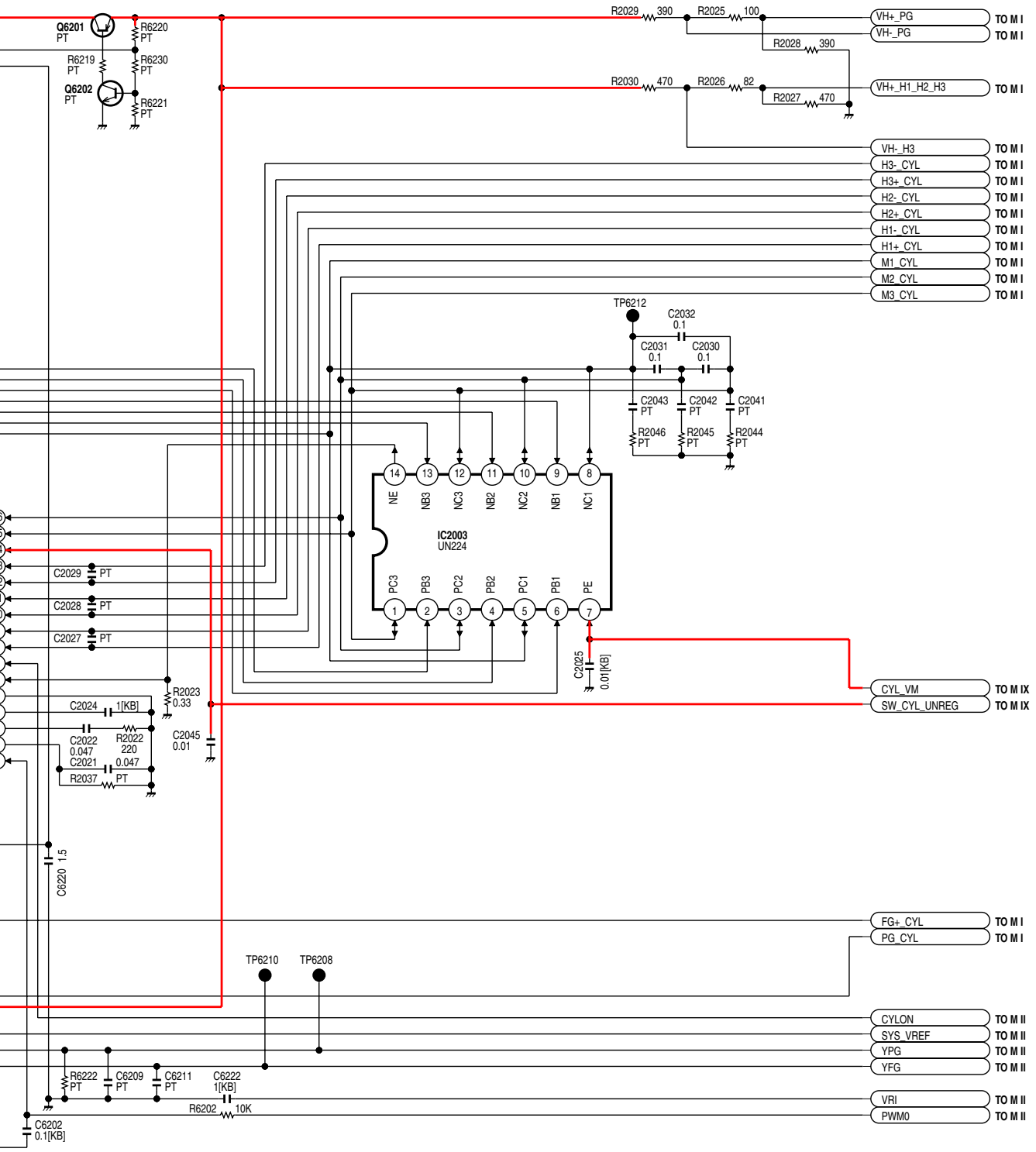

LINK TO SIGNAL WAVEFORM

LSJB8140

PV-L452, PV-L652

MAIN III (CYLINDER/CAPSTAN DRIVE) SCHEMATIC DIAGRAM

MAIN IV (CAMERA I) SCHEMATIC DIAGRAM

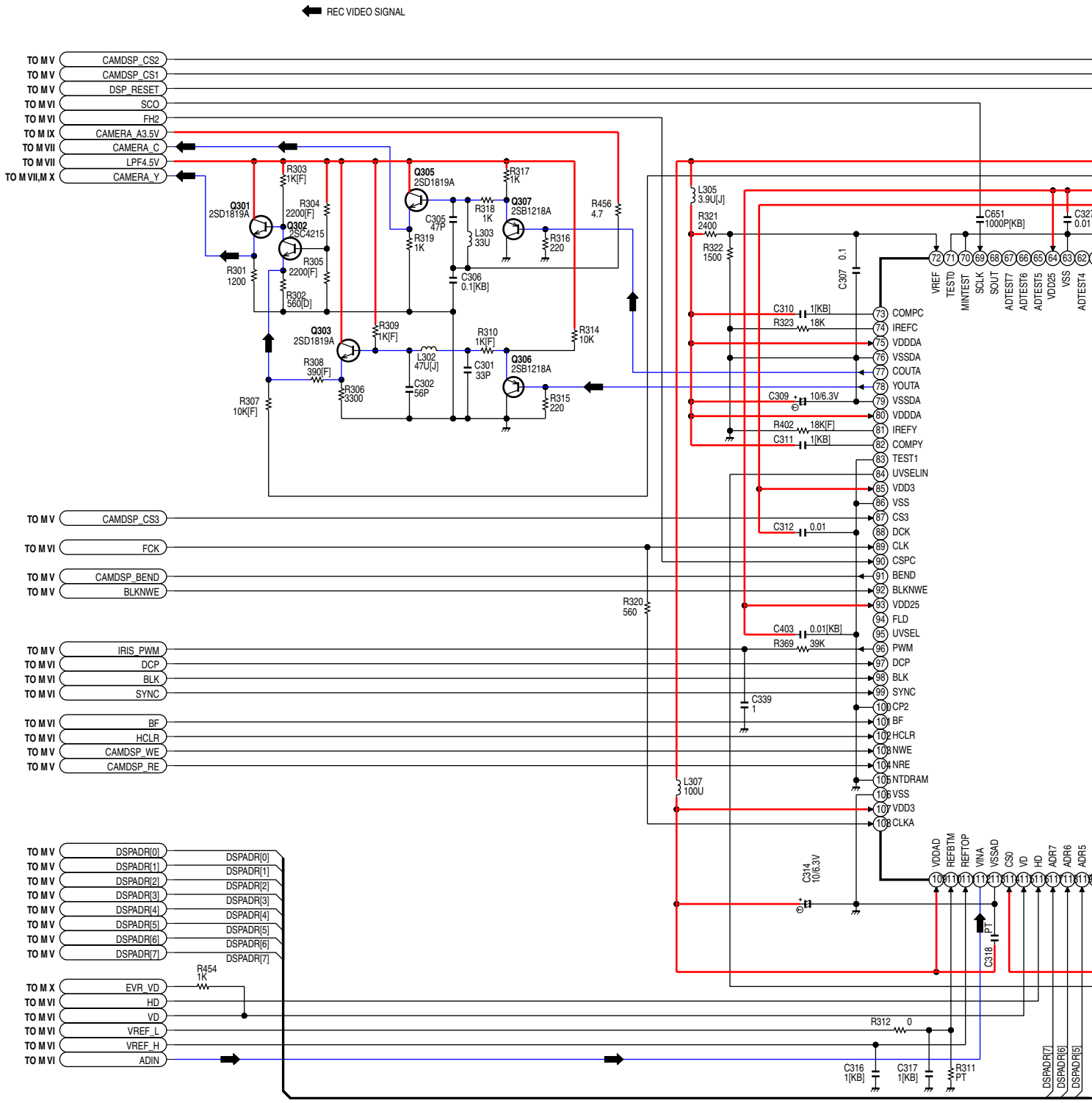

NOTE: For placing a purchase order of the parts, be sure to use the part number listed in the parts list. Do not use the part number on this diagram.

NOTE: FOR SCHEMATIC DIAGRAM AND CIRCUIT BOARD LAYOUT NOTES, REFER TO BEGINNING OF SCHEMATIC SECTION.

COMPARISON CHART OF MODELS & MARKS

MODEL	MARK
PV-L452	A
PV-L652	B
Not Used	PT

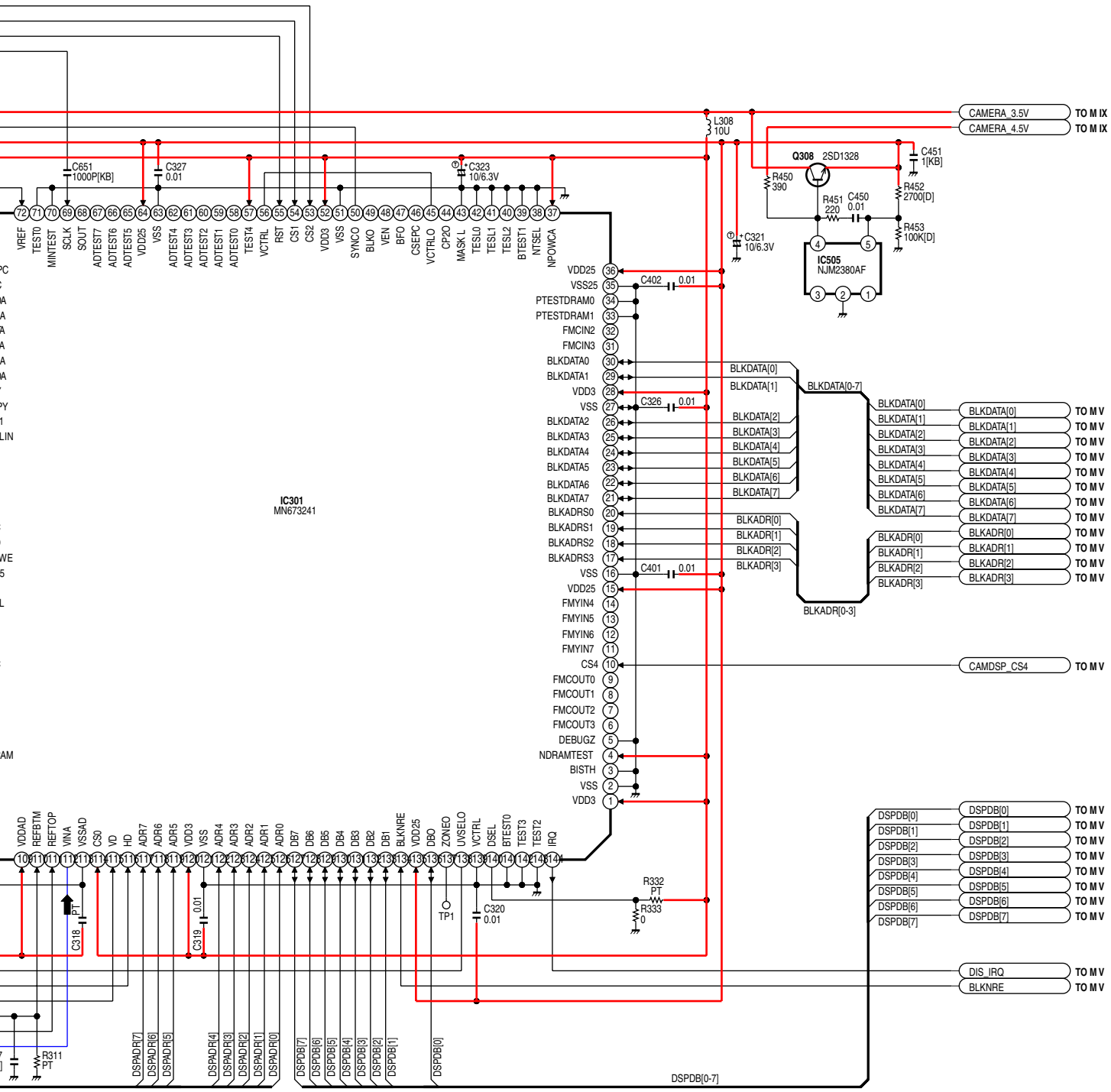

LINK TO SIGNAL WAVEFORM

LSJB8140

PV-L452, PV-L652

MAIN IV (CAMERA I) SCHEMATIC DIAGRAM

MAIN V (CAMERA II/LENS DRIVE) SCHEMATIC DIAGRAM

*2 IC501 and IC6001 replacement note:
IC501 and IC6001 are supplied together only as a Microcontroller Kit (LSUC0005
Microcontroller Kit consists of IC6001, IC501, and Instruction Sheet.
When replacing either IC6001 or IC501, be sure to replace both IC6001 and IC5
When R6001 is found on the Main C.B.A., be sure to remove it at the same time.
Otherwise, normal operation may not be possible.

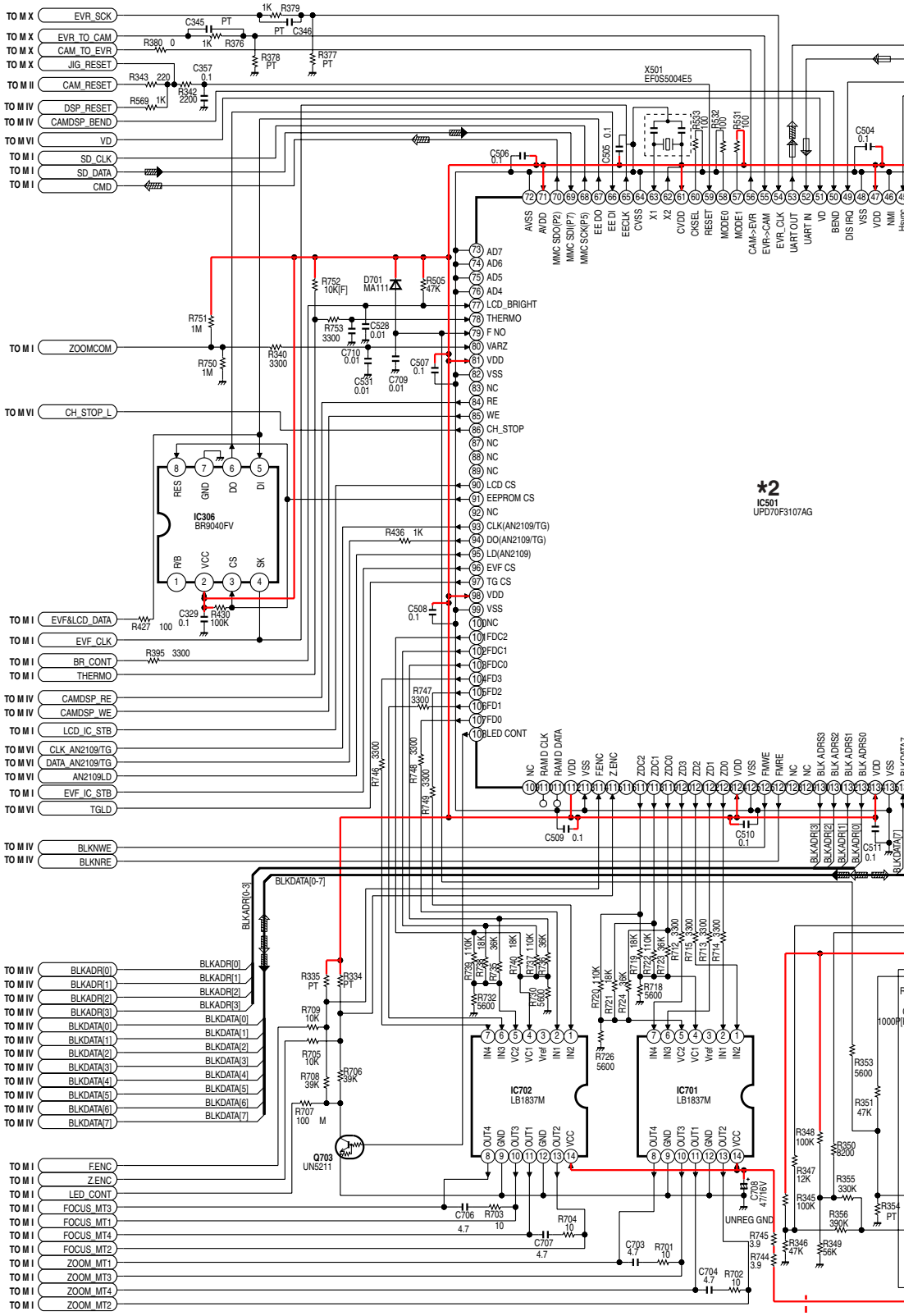

y as a Microcontroller Kit (LSUC0005).
l, and Instruction Sheet.
sure to replace both IC6001 and IC501.
e sure to remove it at the same time.
ssible.

NOTE: For placing a purchase order of the parts, be sure to use the part number listed in the parts list. Do not use the part number on this diagram.

NOTE:
FOR SCHEMATIC DIAGRAM AND CIRCUIT BOARD LAYOUT NOTES, REFER TO BEGINNING OF SCHEMATIC SECTION.

COMPARISON CHART OF MODELS & MARKS

MODEL	MARK
PV-L452	A
PV-L652	B
Not Used	PT

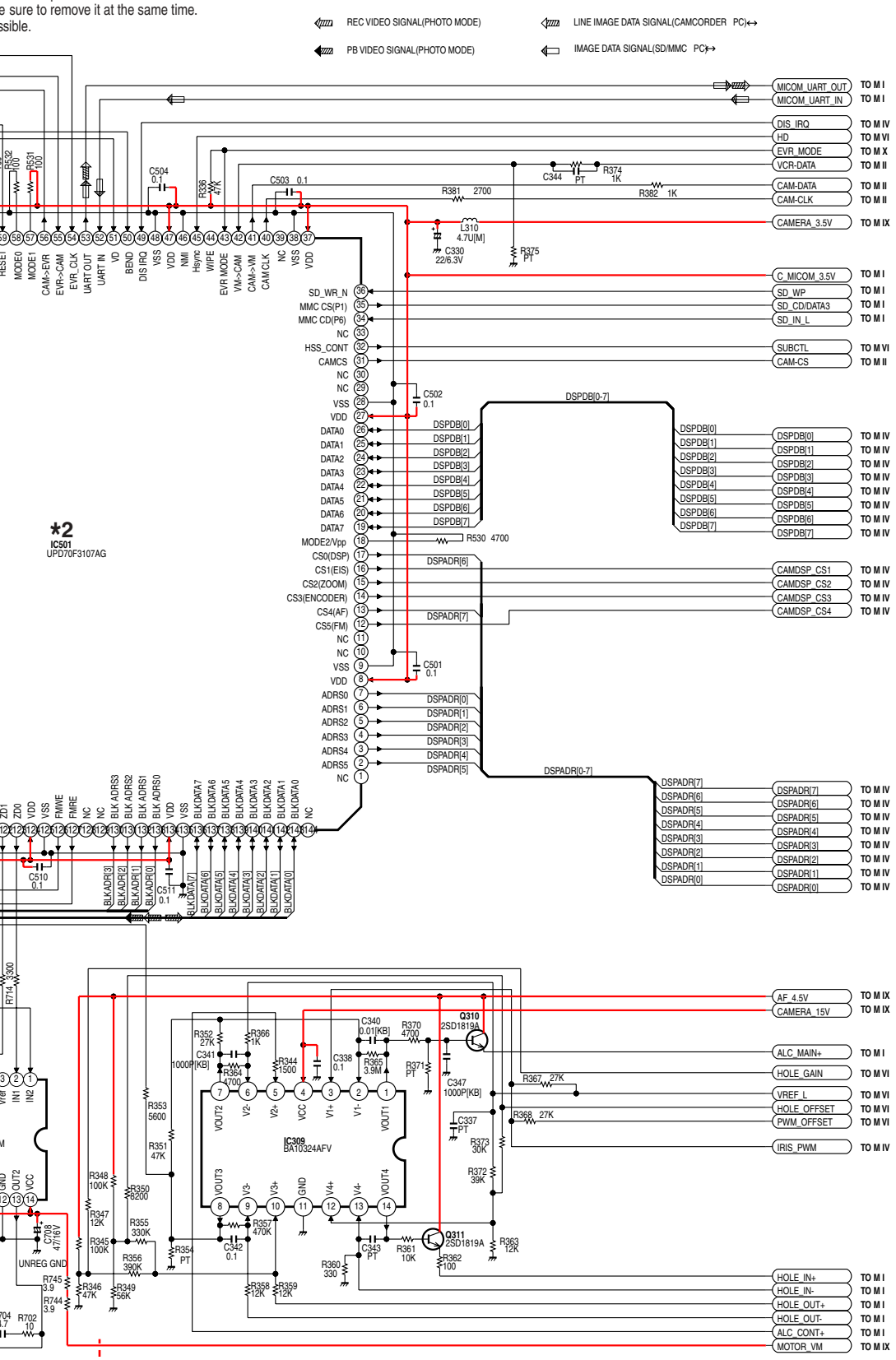

LINK TO SIGNAL WAVEFORM

LSJB8140

PV-L452, PV-L652

MAIN V (CAMERA II/LENS DRIVE) SCHEMATIC DIAGRAM

MAIN VI (CCD DRIVE) SCHEMATIC DIAGRAM

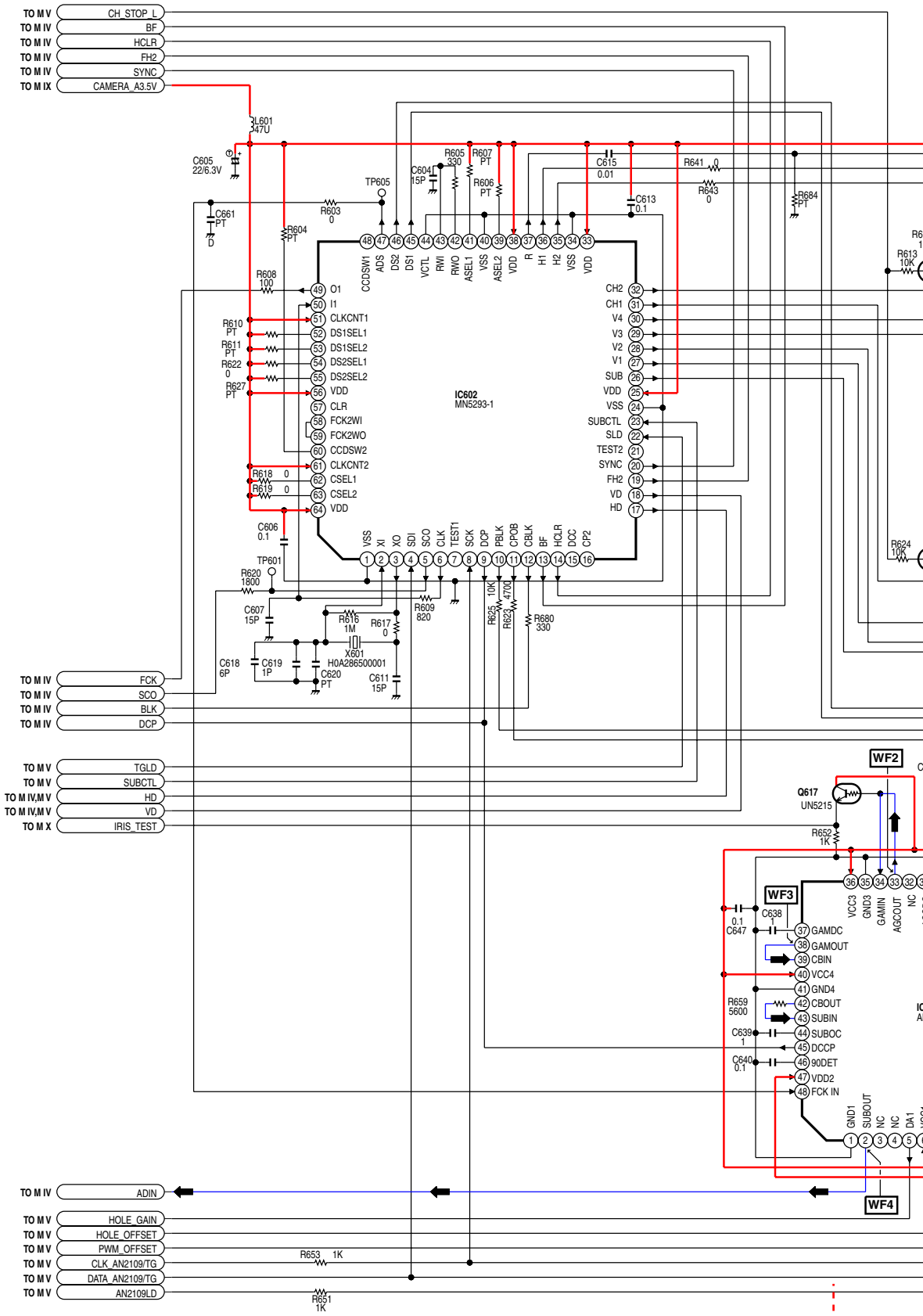

NOTE: For placing a purchase order of the parts, be sure to use the part number listed in the parts list. Do not use the part number on this diagram.

NOTE:
FOR SCHEMATIC DIAGRAM AND CIRCUIT BOARD LAYOUT NOTES, REFER TO BEGINNING OF SCHEMATIC SECTION.

COMPARISON CHART OF MODELS & MARKS

MODEL	MARK
PV-L452	A
PV-L652	B
Not Used	PT

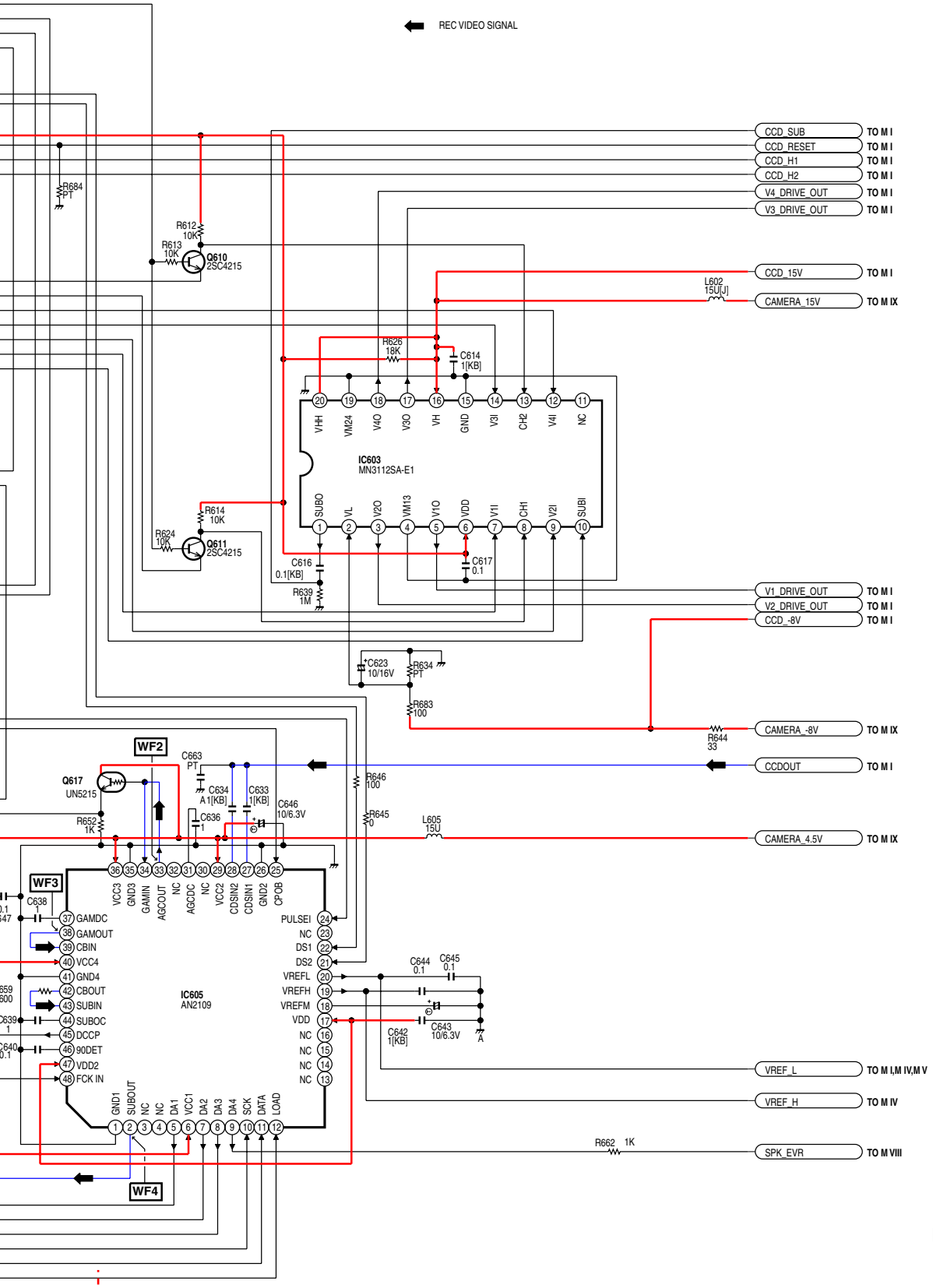

LINK TO SIGNAL WAVEFORM

LSJB8140
PV-L452, PV-L652
MAIN VI (CCD DRIVE) SCHEMATIC DIAGRAM

MAIN VII (VIDEO) SCHEMATIC DIAGRAM

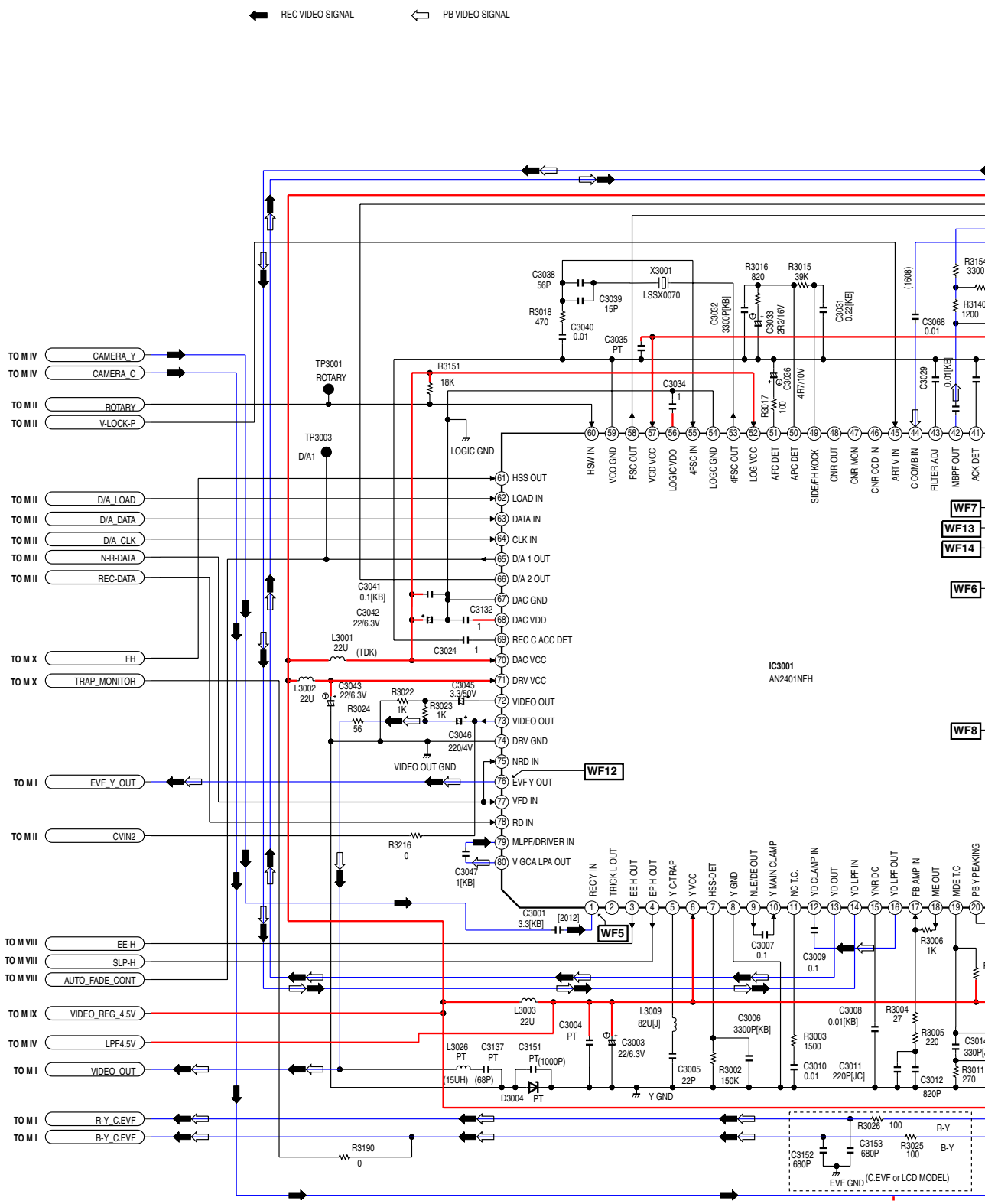

NOTE: For placing a purchase order of the parts, be sure to use the part number listed in the parts list. Do not use the part number on this diagram.

NOTE: FOR SCHEMATIC DIAGRAM AND CIRCUIT BOARD LAYOUT NOTES, REFER TO BEGINNING OF SCHEMATIC SECTION.

COMPARISON CHART OF MODELS & MARKS

MODEL	MARK
PV-L452	A
PV-L652	B
Not Used	PT

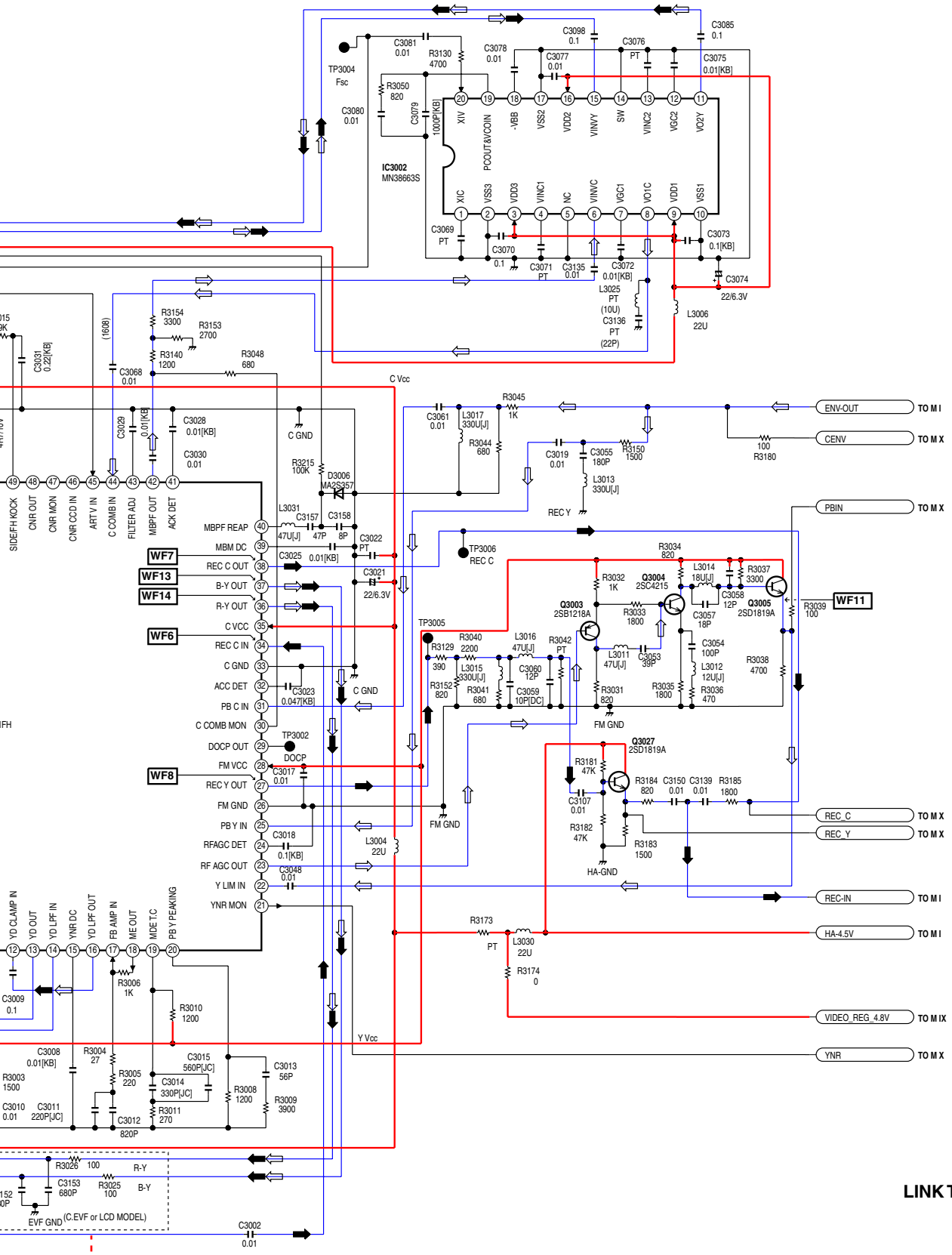

LINK TO SIGNAL WAVEFORM

LSJB8140

PV-L452, PV-L652

MAIN VII (VIDEO) SCHEMATIC DIAGRAM

MAIN VIII (AUDIO) SCHEMATIC DIAGRAM

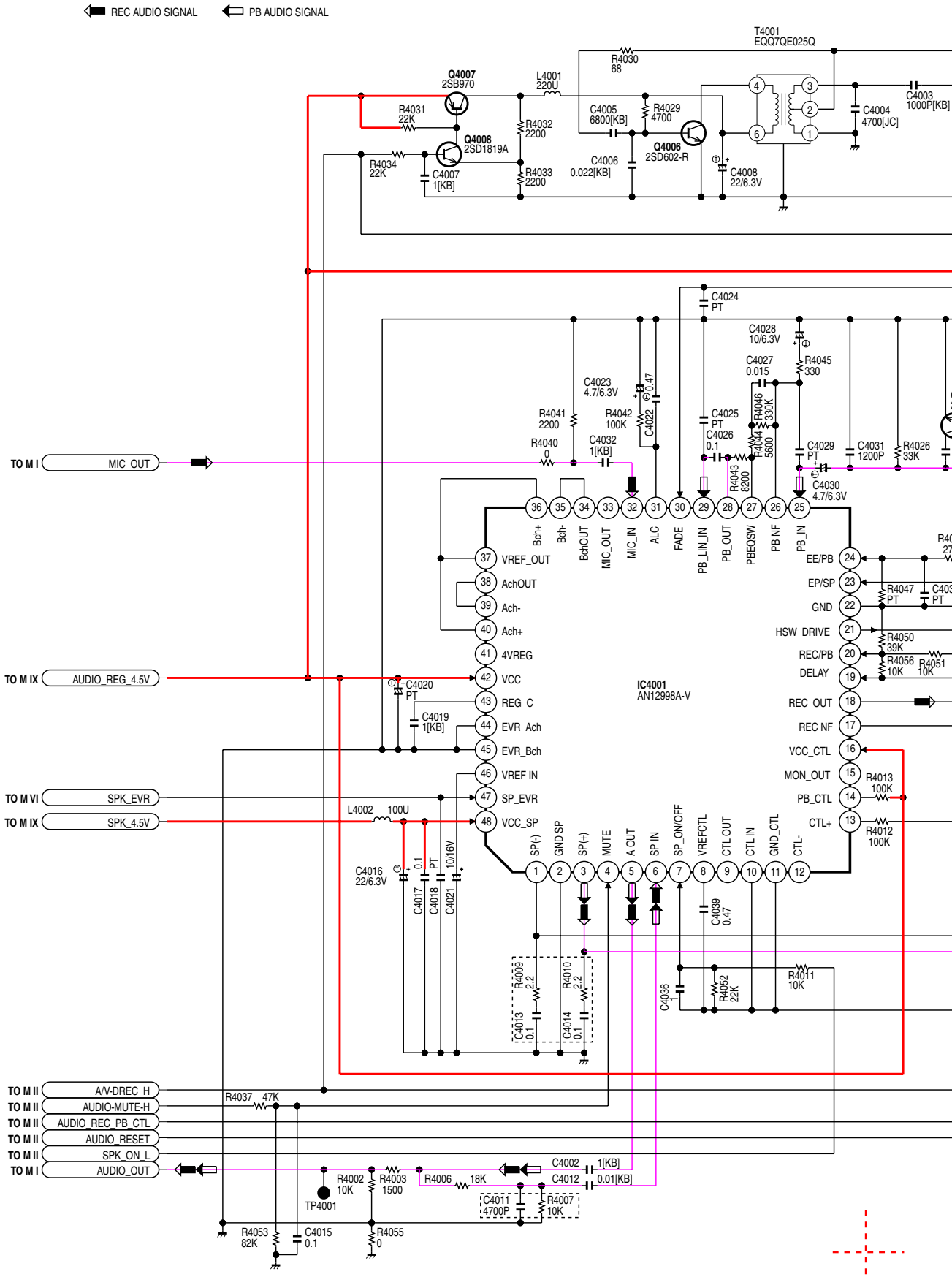

NOTE: For placing a purchase order of the parts, be sure to use the part number listed in the parts list. Do not use the part number on this diagram.

NOTE: FOR SCHEMATIC DIAGRAM AND CIRCUIT BOARD LAYOUT NOTES, REFER TO BEGINNING OF SCHEMATIC SECTION.

COMPARISON CHART OF MODELS & MARKS

MODEL	MARK
PV-L452	A
PV-L652	B
Not Used	PT

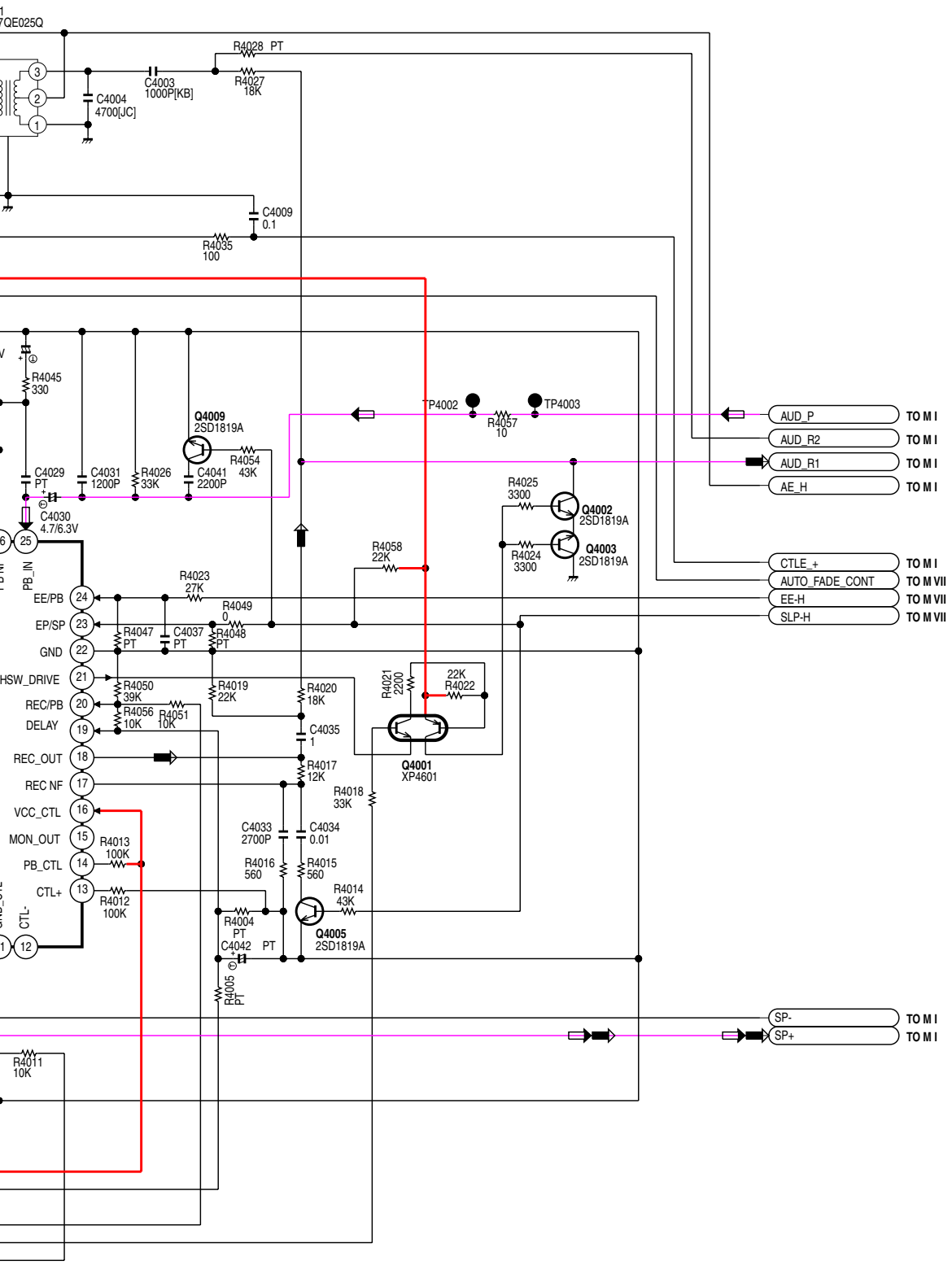

LINK TO SIGNAL WAVEFORM

LSJB8140

PV-L452, PV-L652

MAIN VIII (AUDIO) SCHEMATIC DIAGRAM

MAIN IX (POWER SUPPLY) SCHEMATIC DIAGRAM

CAUTION: FOR CONTINUED PROTECTION AGAINST FIRE HAZARD, REPLACE ONLY WITH THE SAME TYPE 1.5A 24/32V FUSE.
ATTENTION: POUR UNE PROTECTION CONTINUE LES RISQUES D' INCENDIE N' UTILISERQUE DES FUSIBLE DE MÉME TYPE 1.5A 24/32V

CAUTION: FOR CONTINUED PROTECTION AGAINST FIRE HAZARD, REPLACE ONLY WITH THE SAME TYPE 2A 24/32V FUSE.
ATTENTION: POUR UNE PROTECTION CONTINUE LES RISQUES D' INCENDIE N' UTILISERQUE DES FUSIBLE DE MÉME TYPE 2A 24/32V

IMPORT
COMPO
SPECIA
WHEN
USE ON

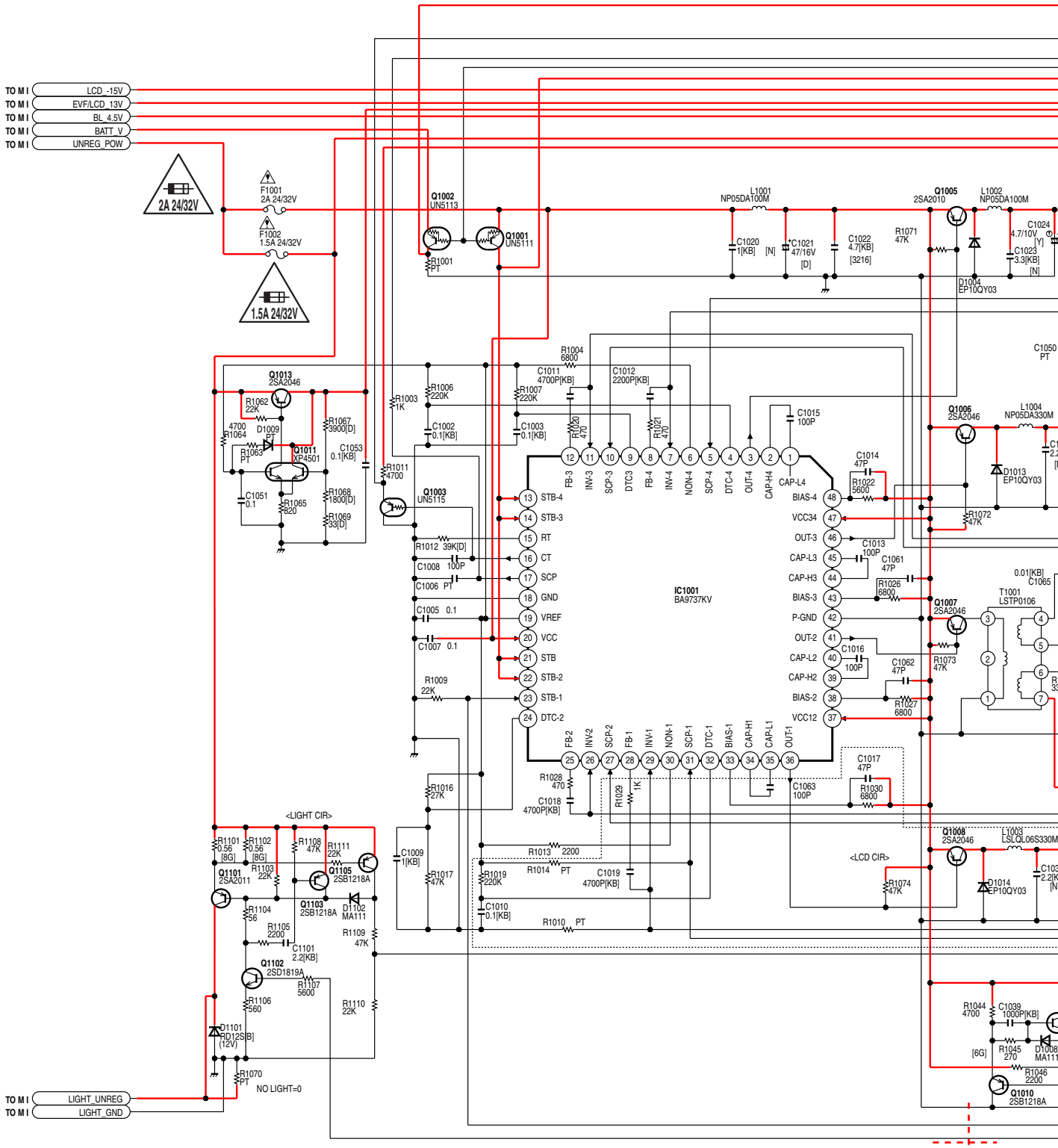

NOTE: For placing a purchase order of the parts, be sure to use the part number listed in the parts list. Do not use the part number on this diagram.

NOTE:
FOR SCHEMATIC DIAGRAM AND CIRCUIT BOARD LAYOUT NOTES, REFER TO BEGINNING OF SCHEMATIC SECTION.

COMPARISON CHART OF MODELS & MARKS

MODEL	MARK
PV-L452	A
PV-L652	B
Not Used	PT

IMPORTANT SAFETY NOTICE:
COMPONENTS IDENTIFIED BY THE SIGN ⚠ HAVE SPECIAL CHARACTERISTICS IMPORTANT FOR SAFETY. WHEN REPLACING ANY OF THESE COMPONENTS, USE ONLY THE SPECIFIED PARTS.

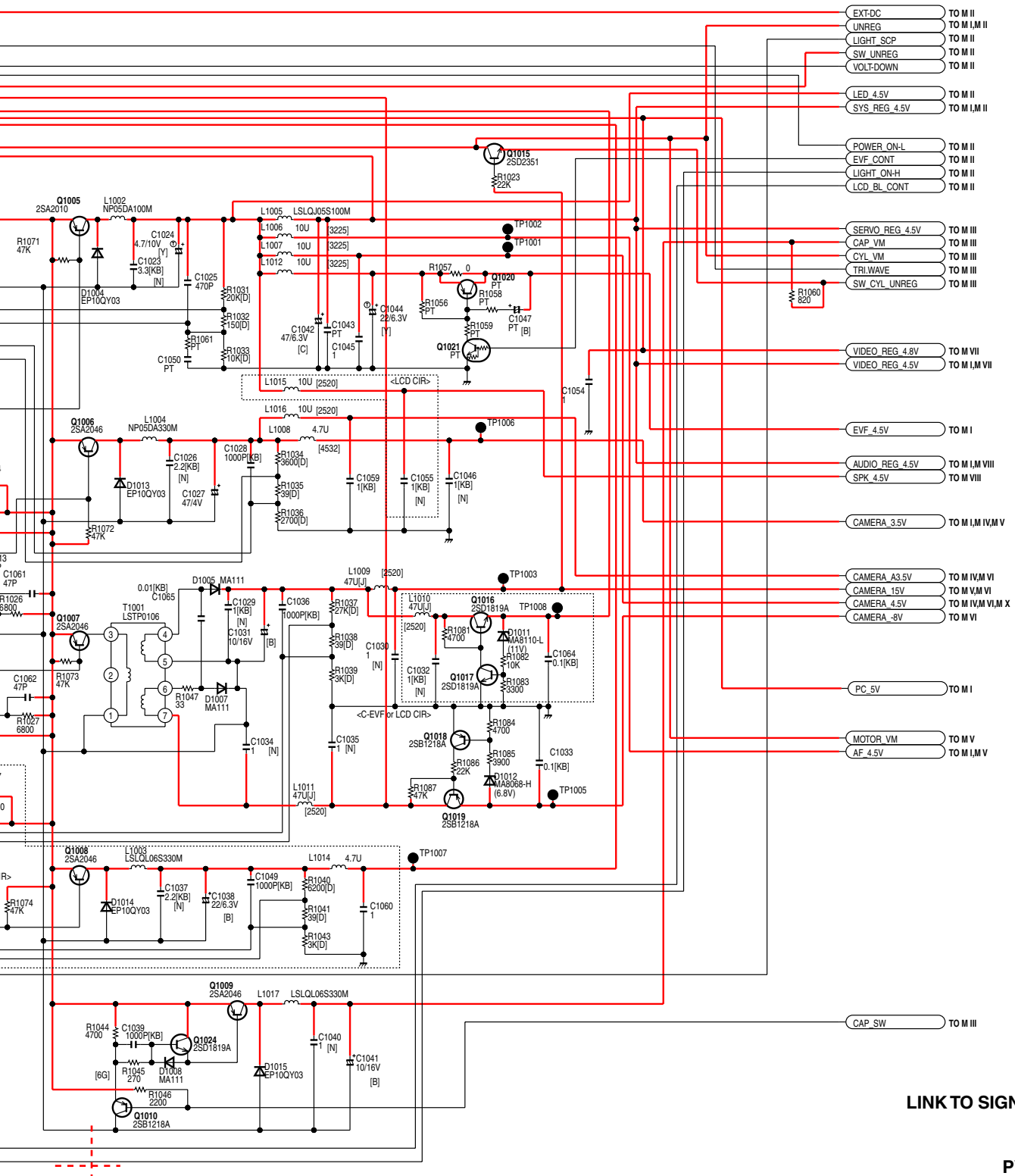

LINK TO SIGNAL WAVEFORM

LSJB8140

PV-L452, PV-L652

MAIN IX (POWER SUPPLY) SCHEMATIC DIAGRAM

MAIN X (EVR CONNECTOR) SCHEMATIC DIAGRAM

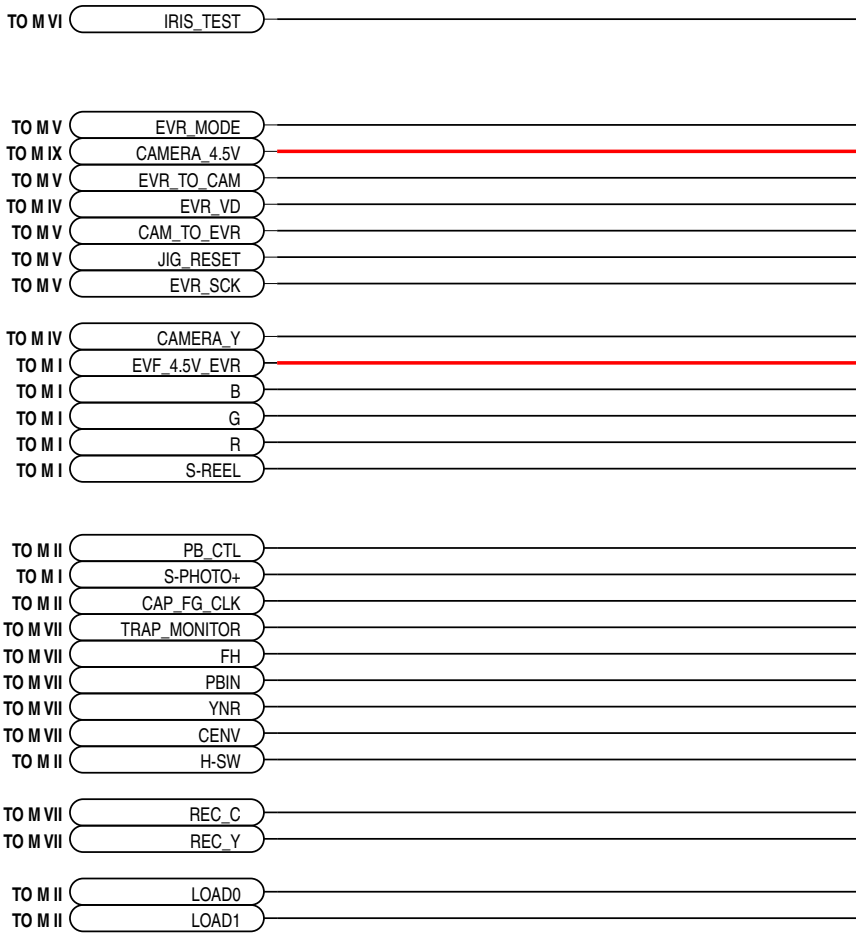

NOTE: For placing a purchase order of the parts,
be sure to use the part number listed in the parts list.
Do not use the part number on this diagram.

NOTE:
FOR SCHEMATIC DIAGRAM AND CIRCUIT BOARD LAYOUT NOTES,
REFER TO BEGINNING OF SCHEMATIC SECTION.

COMPARISON CHART OF MODELS & MARKS

MODEL	MARK
PV-L452	A
PV-L652	B
Not Used	PT

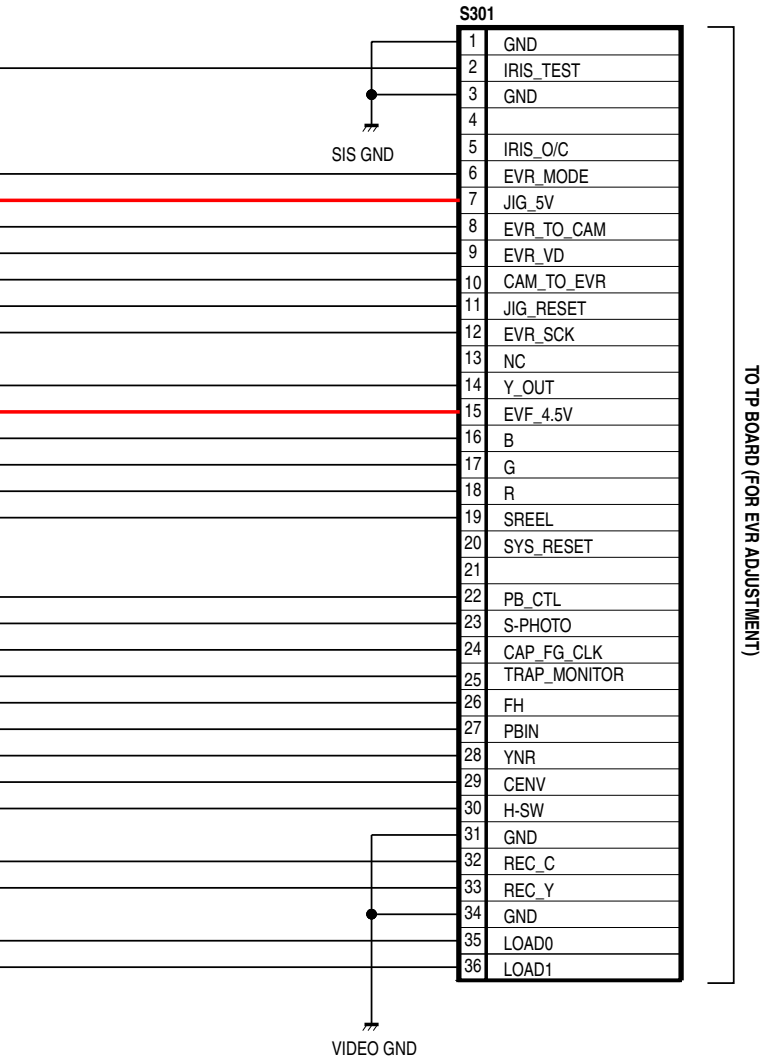

LSJB8140
PV-L452, PV-L652
MAIN X (EVR CONNECTOR) SCHEMATIC DIAGRAM

7.3. LCD SCHEMATIC DIAGRAMS

LCD I (LCD POWER) SCHEMATIC DIAGRAM

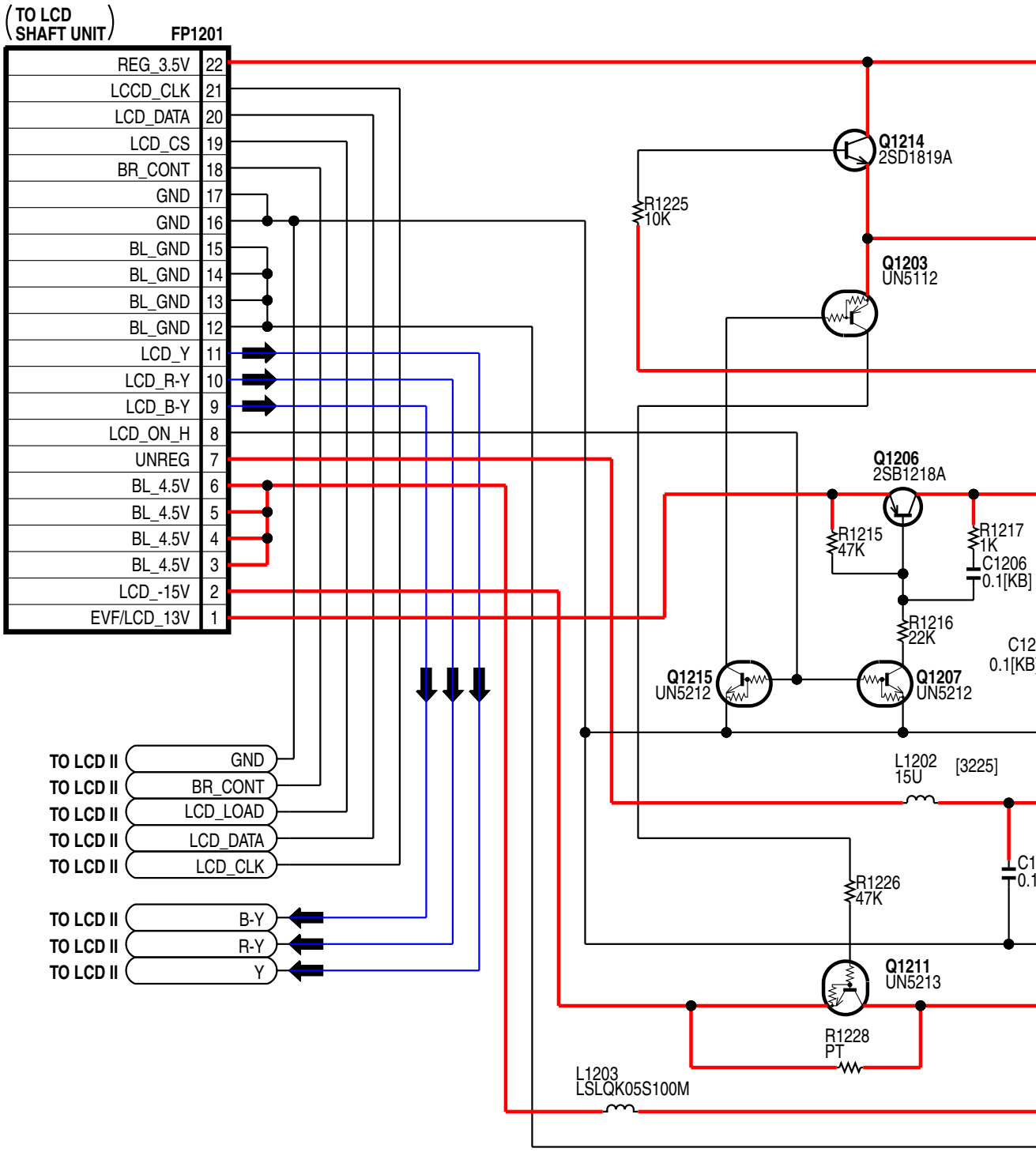

NOTE: For placing a purchase order of the parts, be sure to use the part number listed in the parts list. Do not use the part number on this diagram.

NOTE:
FOR SCHEMATIC DIAGRAM AND CIRCUIT BOARD LAYOUT NOTES, REFER TO BEGINNING OF SCHEMATIC SECTION.

COMPARISON CHART OF MODELS & MARKS

MODEL	MARK
PV-L452	A
PV-L652	B
Not Used	PT

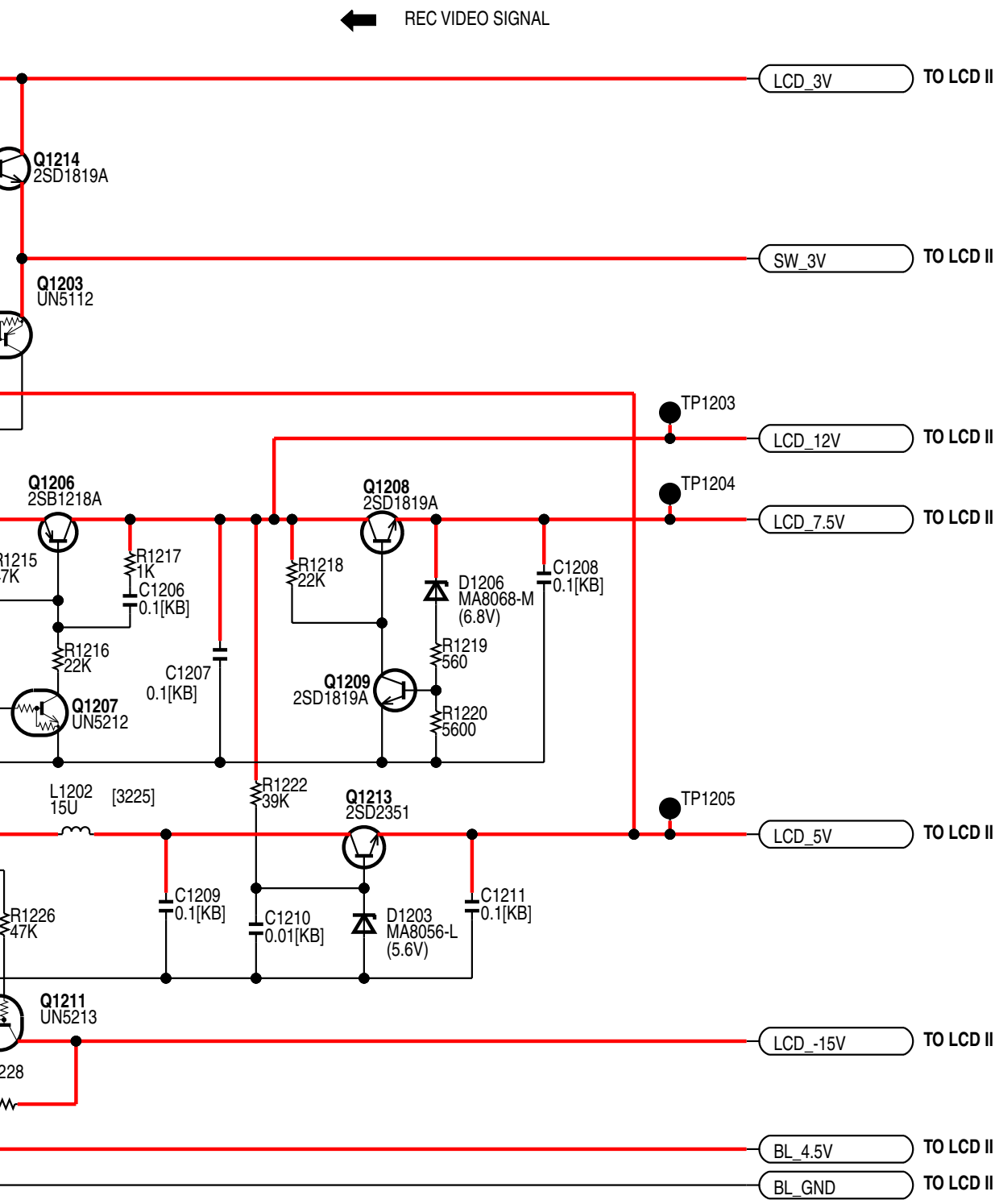

LSJB8143
PV-L452, PV-L652
LCD I (LCD POWER) SCHEMATIC DIAGRAM

LCD II (LCD DRIVE) SCHEMATIC DIAGRAM

IMPORTANT SAFETY NOTICE:
COMPONENTS IDENTIFIED BY THE SIGN ⚠
SPECIAL CHARACTERISTICS IMPORTANT FO
WHEN REPLACING ANY OF THESE COMPONE
USE ONLY THE SPECIFIED PARTS.

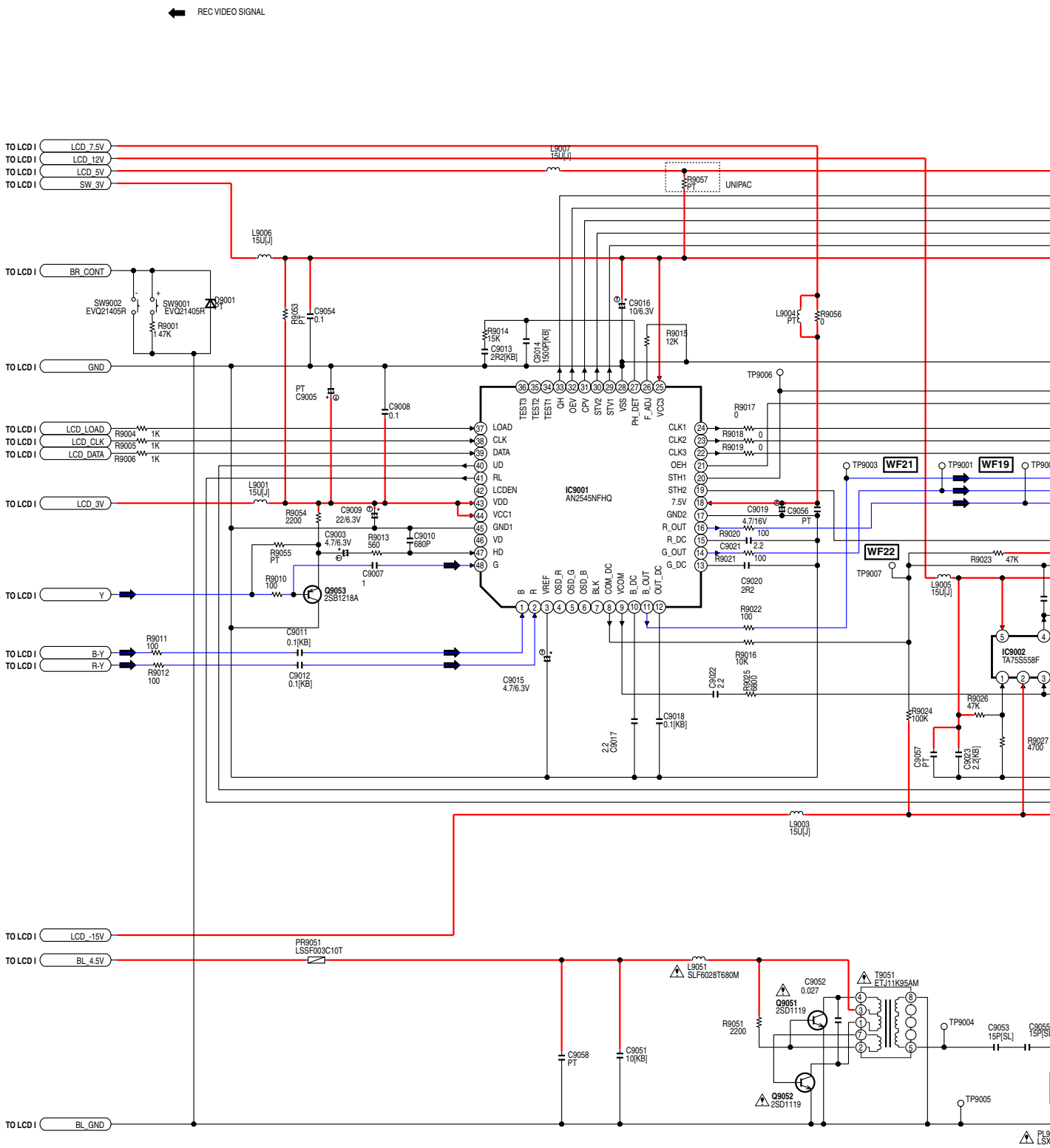

T SAFETY NOTICE:
NTS IDENTIFIED BY THE SIGN ⚠ HAVE
HARACTERISTICS IMPORTANT FOR SAFETY.
LACING ANY OF THESE COMPONENTS,
THE SPECIFIED PARTS.

NOTE: For placing a purchase order of the parts, be sure to use the part number listed in the parts list. Do not use the part number on this diagram.

NOTE:
FOR SCHEMATIC DIAGRAM AND CIRCUIT BOARD LAYOUT NOTES, REFER TO BEGINNING OF SCHEMATIC SECTION.

COMPARISON CHART OF MODELS & MARKS

MODEL	MARK
PV-L452	A
PV-L652	B
Not Used	PT

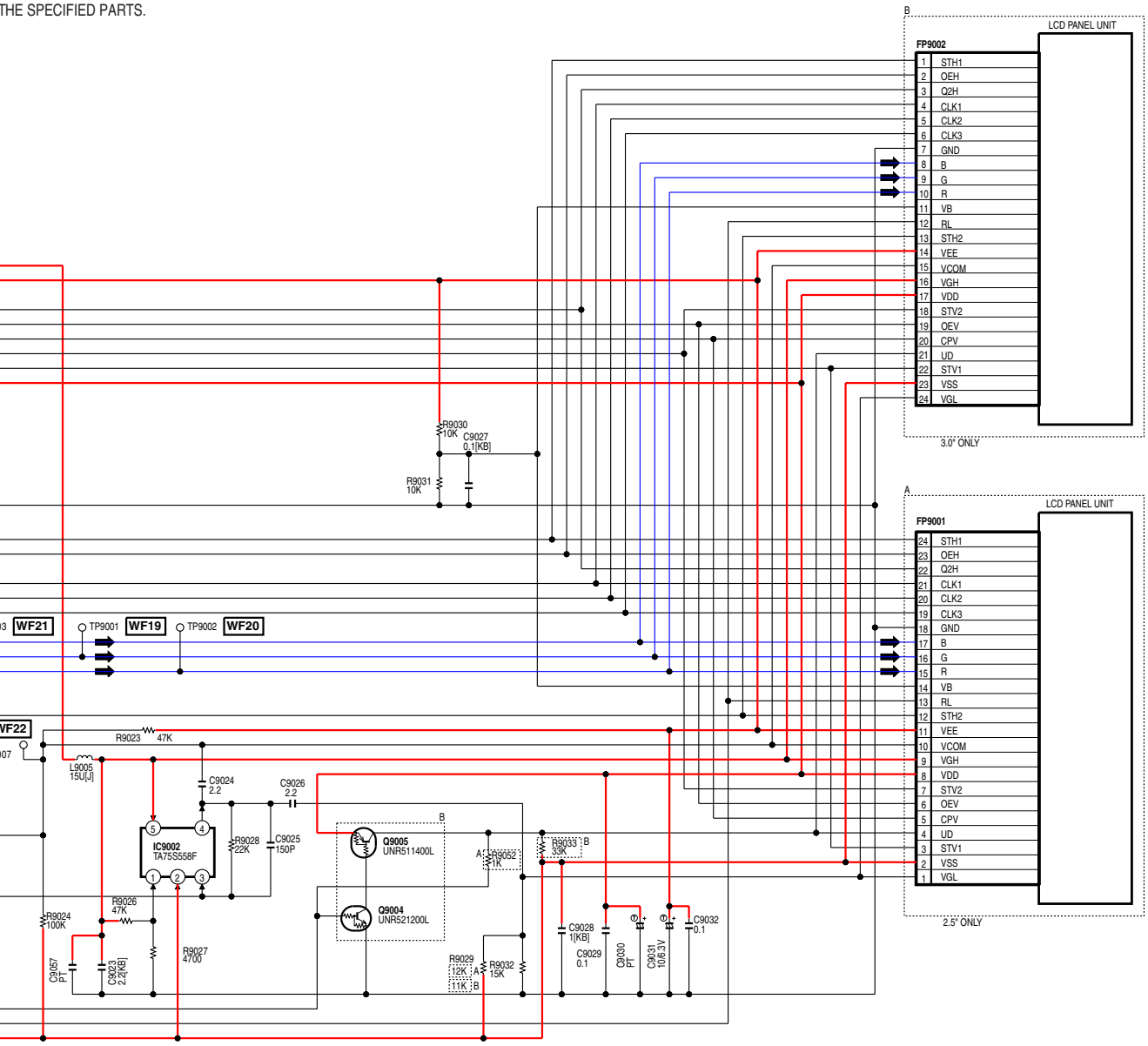

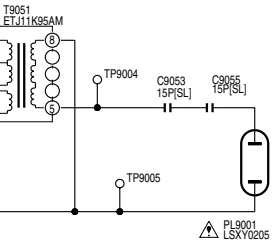

LINK TO SIGNAL WAVEFORM

LSJB8143
PV-L452, PV-L652
LCD II (LCD DRIVE) SCHEMATIC DIAGRAM

7.4. COLOR EVF SCHEMATIC DIAGRAM (Model: PV-L652)

COLOR EVF SCHEMATIC DIAGRAM (B)

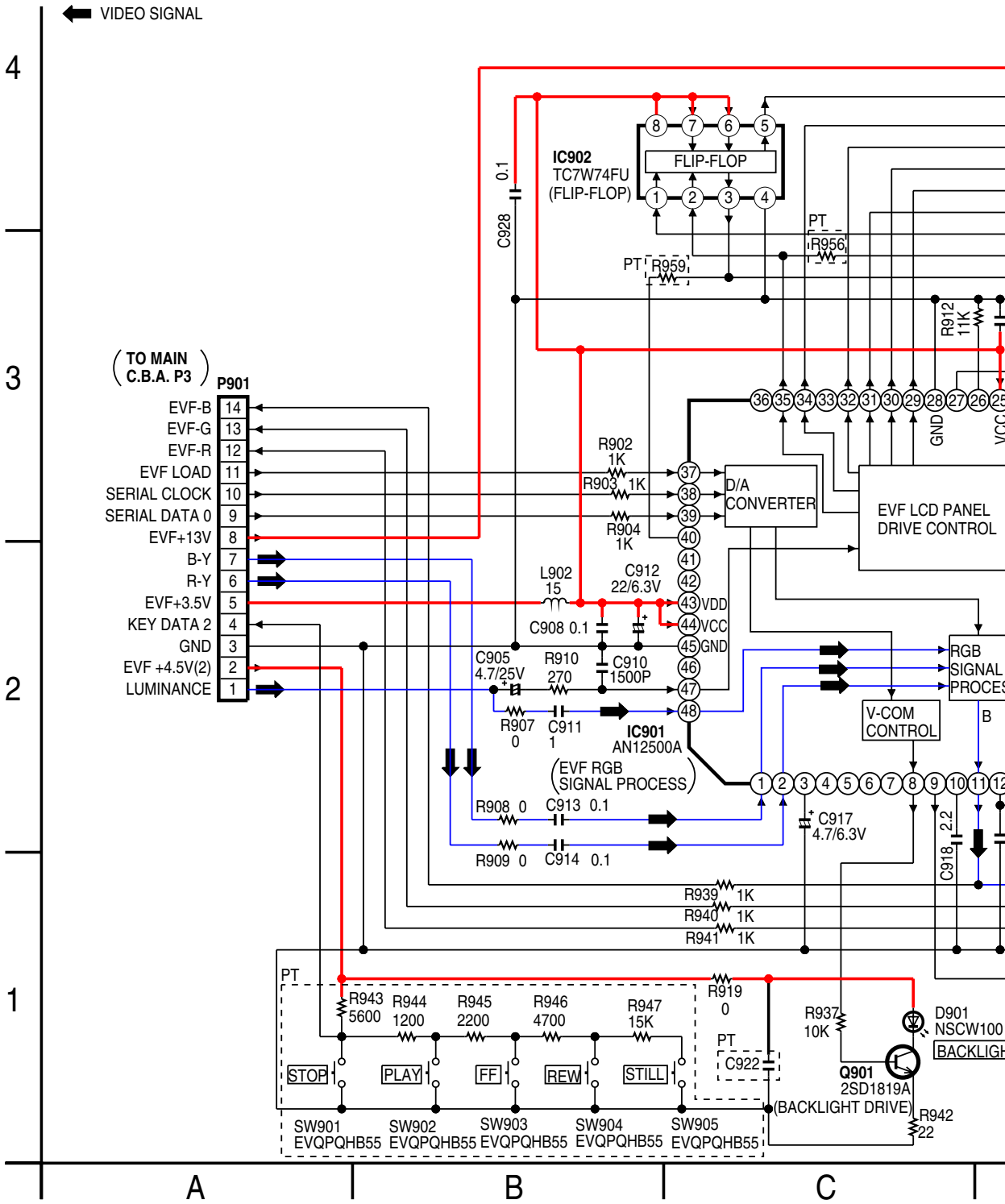

NOTE: For placing a purchase order of the parts, be sure to use the part number listed in the parts list. Do not use the part number on this diagram.

NOTE:
FOR SCHEMATIC DIAGRAM AND CIRCUIT BOARD LAYOUT NOTES, REFER TO BEGINNING OF SCHEMATIC SECTION.

COMPARISON CHART OF MODELS & MARKS

MODEL	MARK
PV-L452	A
PV-L652	B
Not Used	PT

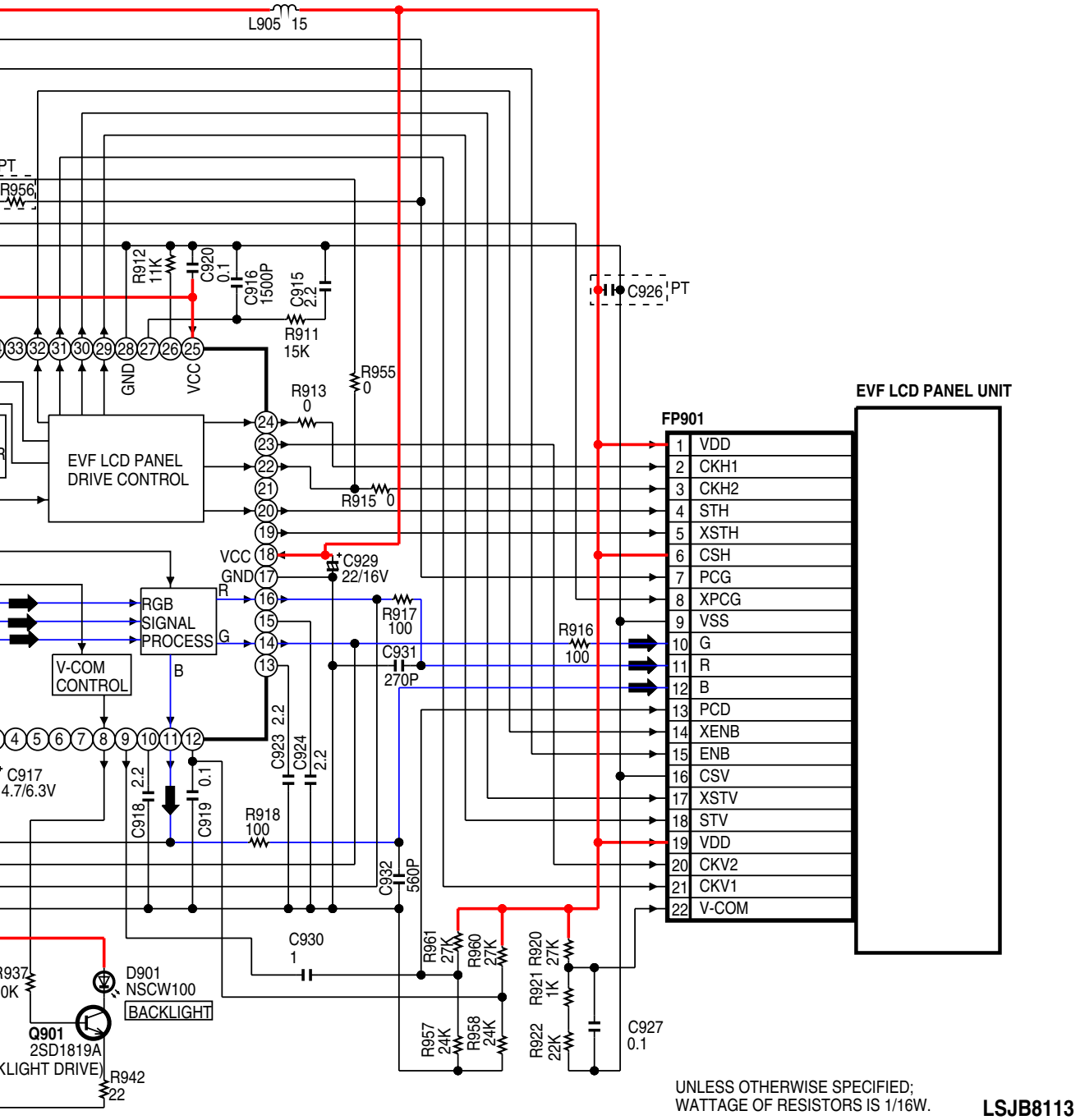

UNLESS OTHERWISE SPECIFIED;
WATTAGE OF RESISTORS IS 1/16W.

LSJB8113

C D E F

PV-L652

COLOR EVF SCHEMATIC DIAGRAM

7.5. HEAD AMP SCHEMATIC DIAGRAM

HEAD AMP SCHEMATIC DIAGRAM

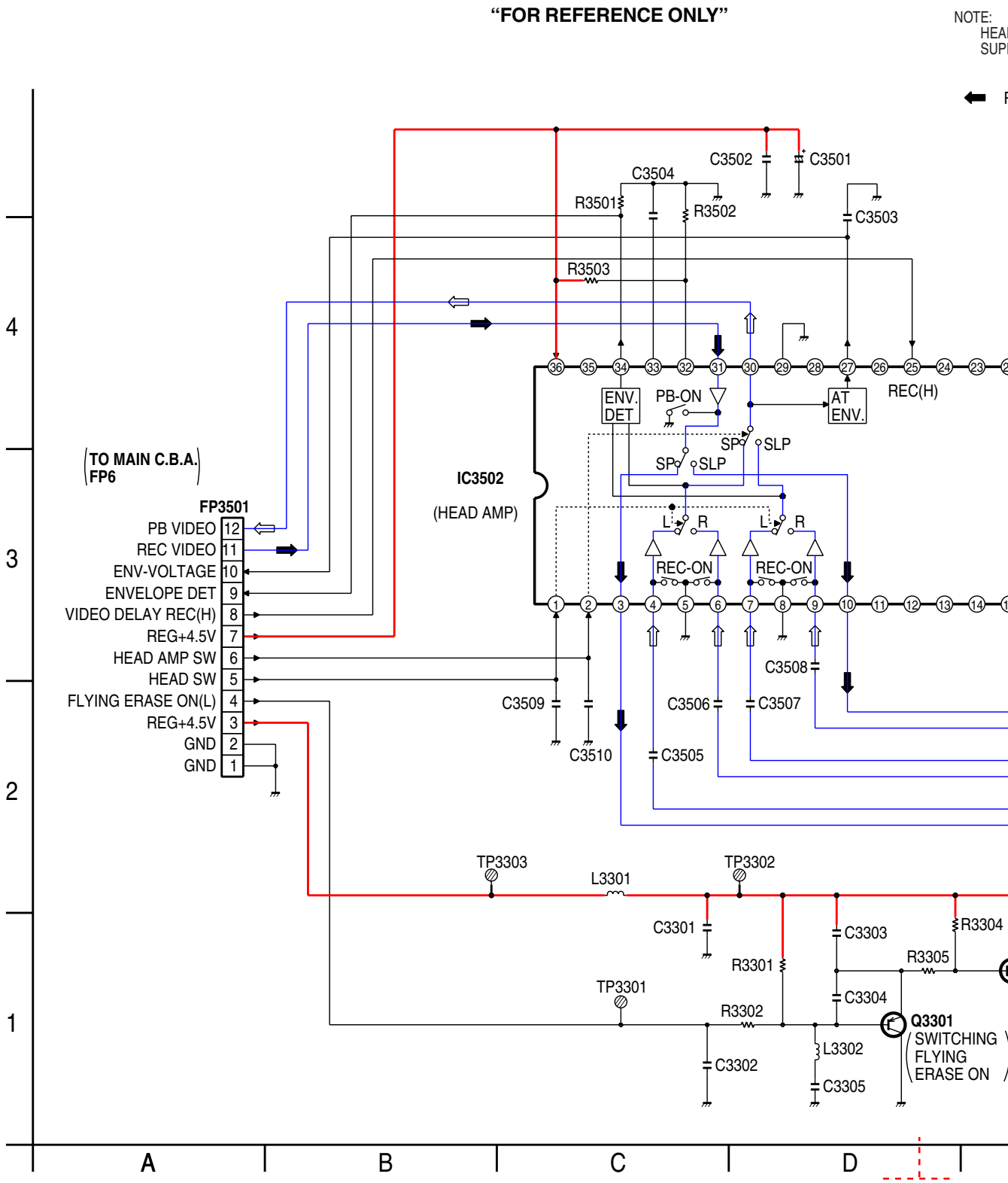

NOTE: For placing a purchase order of the parts,
be sure to use the part number listed in the parts list.
Do not use the part number on this diagram.

NOTE:
FOR SCHEMATIC DIAGRAM AND CIRCUIT BOARD LAYOUT NOTES,
REFER TO BEGINNING OF SCHEMATIC SECTION.

COMPARISON CHART OF MODELS & MARKS

MODEL	MARK
PV-L452	A
PV-L652	B
Not Used	PT

NOTE:
HEAD AMP IS NOT SERVICEABLE AND IS
SUPPLIED AS A CYLINDER UNIT ONLY FOR REPLACEMENT.

⬅ REC VIDEO SIGNAL ⇦ PB VIDEO SIGNAL

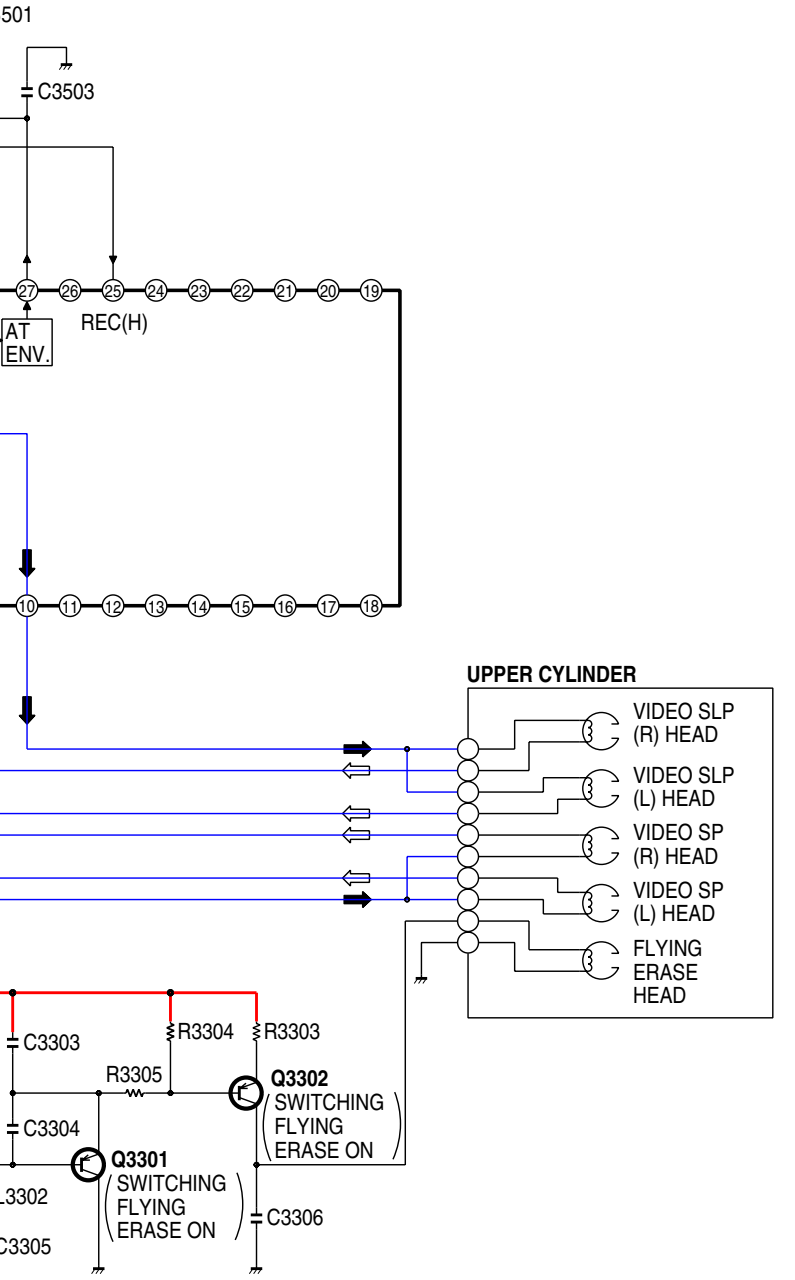

D E F

PV-L452, PV-L652
HEAD AMP SCHEMATIC DIAGRAM

7.6. LCD SHAFT UNIT / CCD UNIT / EVF UNIT (Model: PV-L452) SCHEMATIC DIAG

LCD SHAFT UNIT

"FOR REFERENCE ONLY"

NOTE:
LCD SHAFT UNIT IS NOT SERVICEABLE AND IS SUPPLIED AS A UNIT ONLY FOR REPLACEMENT.

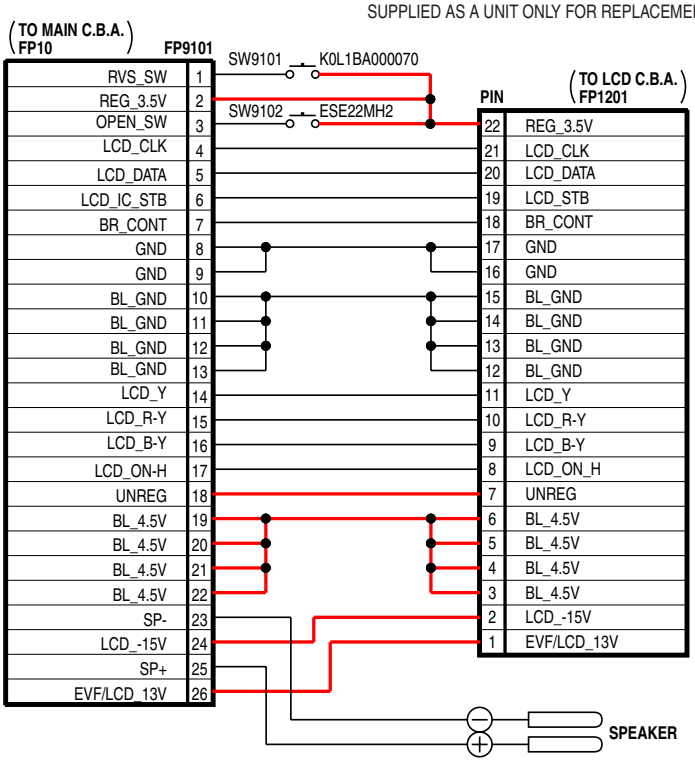

IC6001 KEY VOLTAGE CHART (LCD PANEL MODE) (SW9101,9102)

TERMINAL VOLTAGE (Pin 79 of IC6001)	LCD PANEL MODE	
	NORMAL& REVERSE	OPEN&CLOSE
0V	NORMAL	CLOSE
2.6V	NORMAL	OPEN
1.1V	REVERSE	CLOSE
3.5V	REVERSE	OPEN

SW9101 ON :REVERSE
OFF:NORMAL
SW9102 ON :OPEN
OFF:CLOSE

EVF UNIT (A)

NOTE:
EVF UNIT IS NOT
SUPPLIED AS A U

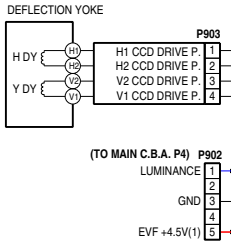

CCD UNIT

"FOR REFERENCE ONLY"

NOTE:
CCD UNIT IS NOT SERVICEABLE AND IS SUPPLIED AS A LENS UNIT ONLY FOR REPLACEMENT.

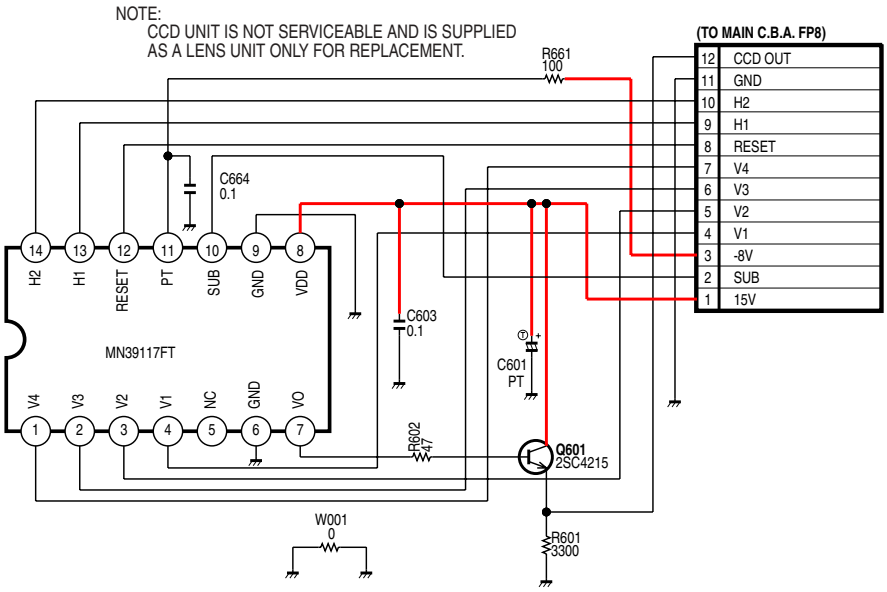

NOTE: For placing a purchase order of the parts, be sure to use the part number listed in the parts list. Do not use the part number on this diagram.

NOTE:
FOR SCHEMATIC DIAGRAM AND CIRCUIT BOARD LAYOUT NOTES, REFER TO BEGINNING OF SCHEMATIC SECTION.

COMPARISON CHART OF MODELS & MARKS

MODEL	MARK
PV-L452	A
PV-L652	B
Not Used	PT

EVF UNIT (A)

"FOR REFERENCE ONLY"

NOTE:
EVF UNIT IS NOT SERVICEABLE AND IS SUPPLIED AS A UNIT ONLY FOR REPLACEMENT.

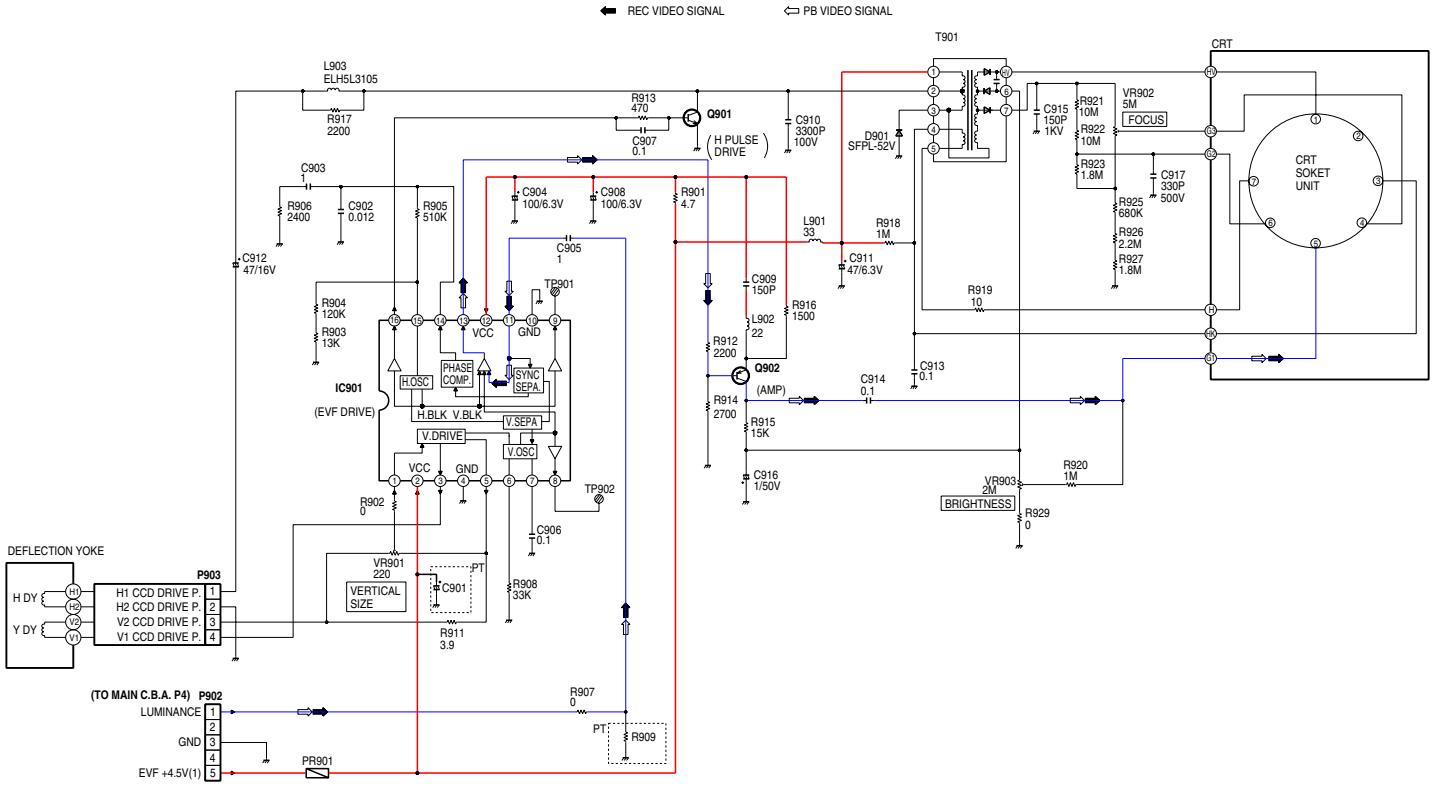

PV-L452, PV-L652
LCD SHAFT UNIT
EVF UNIT
CCD DUNIT

7.7. TOP OPERATION UNIT / SIDE L FPC UNIT / MECHANISM FPC UNIT SCHEMA

TOP OPERATION UNIT

"FOR REFERENCE ONLY"

NOTE:
TOP OPERATION UNIT IS NOT SERVICEABLE AND IS SUPPLIED AS A UNIT ONLY FOR REPLACEMENT.

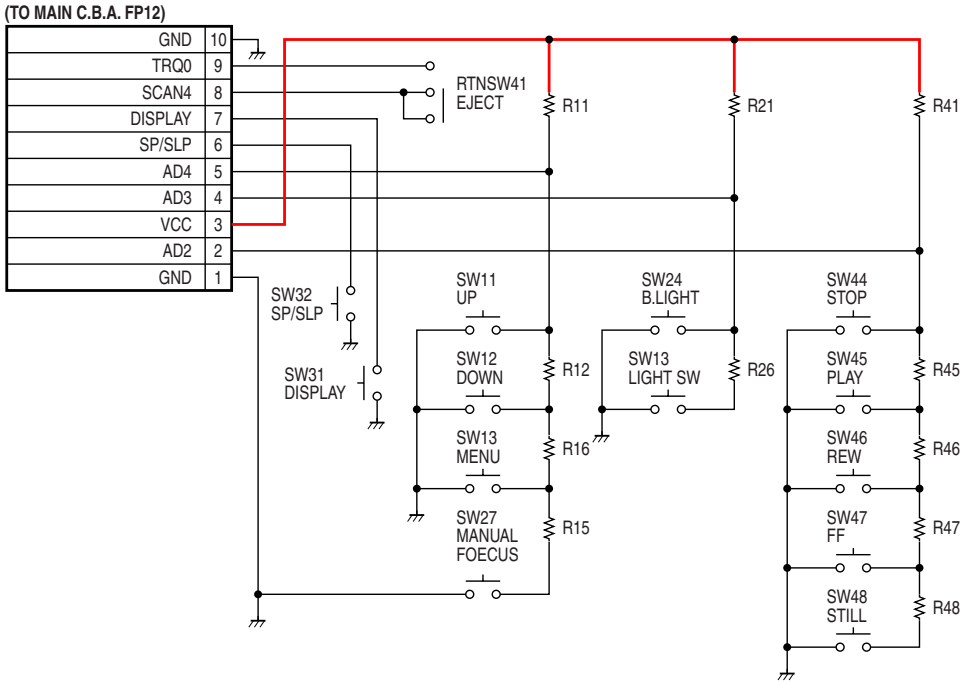

MECHANISM FPC UNIT

"FOR REFERENCE ONLY"

NOTE:
MECHANISM FPC UNIT IS NOT SERVICEABLE AND IS SUPPLIED AS A UNIT ONLY FOR REPLACEMENT.

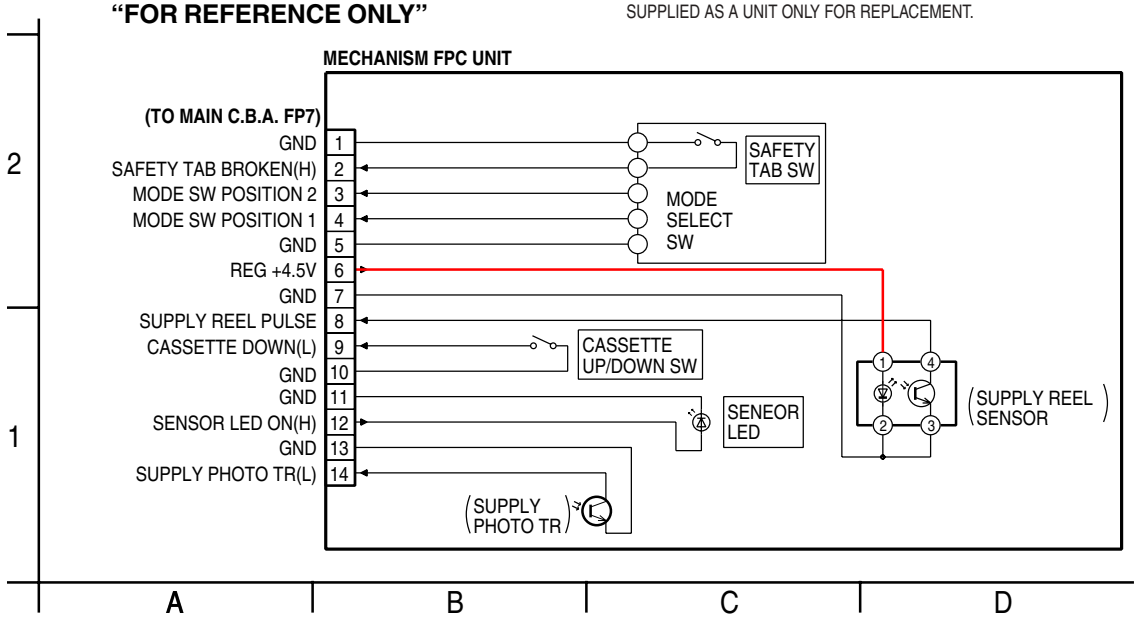

UNIT SCHEMATIC DIAGRAMS

NOTE: For placing a purchase order of the parts, be sure to use the part number listed in the parts list. Do not use the part number on this diagram.

NOTE:
FOR SCHEMATIC DIAGRAM AND CIRCUIT BOARD LAYOUT NOTES, REFER TO BEGINNING OF SCHEMATIC SECTION.

COMPARISON CHART OF MODELS & MARKS

MODEL	MARK
PV-L452	A
PV-L652	B
Not Used	PT

SIDE L FPC UNIT

"FOR REFERENCE ONLY"

NOTE:
SIDE L FPC UNIT IS NOT SERVICEABLE AND IS SUPPLIED AS A UNIT ONLY FOR REPLACEMENT.

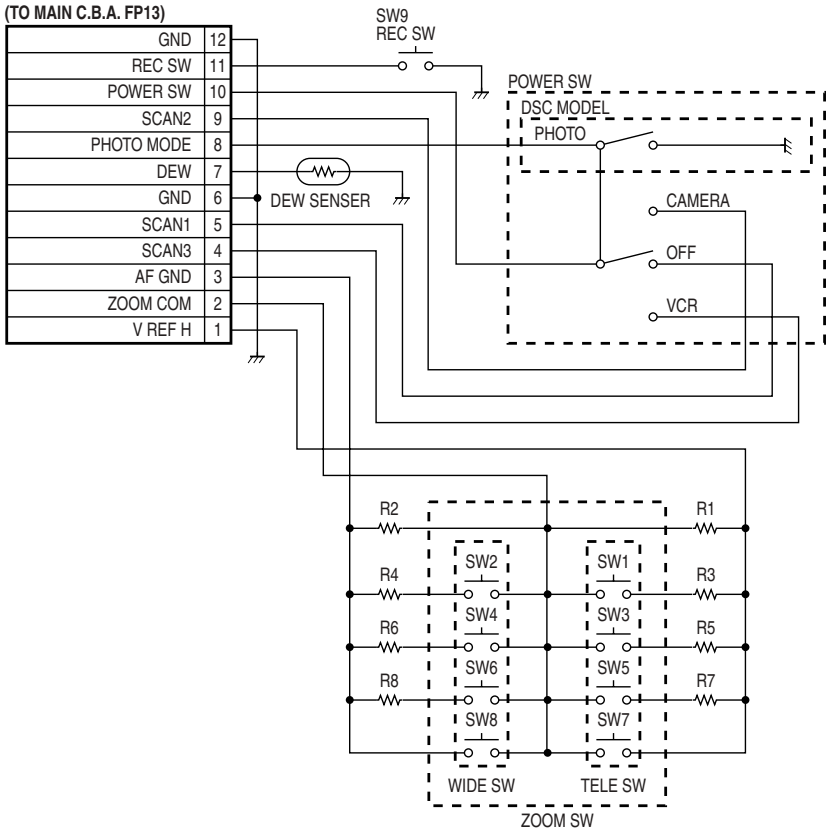

PV-L452, PV-L652
TOP OPERATION UNIT
SIDE L FPC UNIT
MECHANISM FPC UNIT

7.8. MIC UNIT / BATTERY CATCHER UNIT SCHEMATIC DIAGRAMS

MIC UNIT

"FOR REFERENCE ONLY"

NOTE:
MIC UNIT IS NOT SERVICEABLE AND IS
SUPPLIED AS A UNIT ONLY FOR REPLACEMENT.

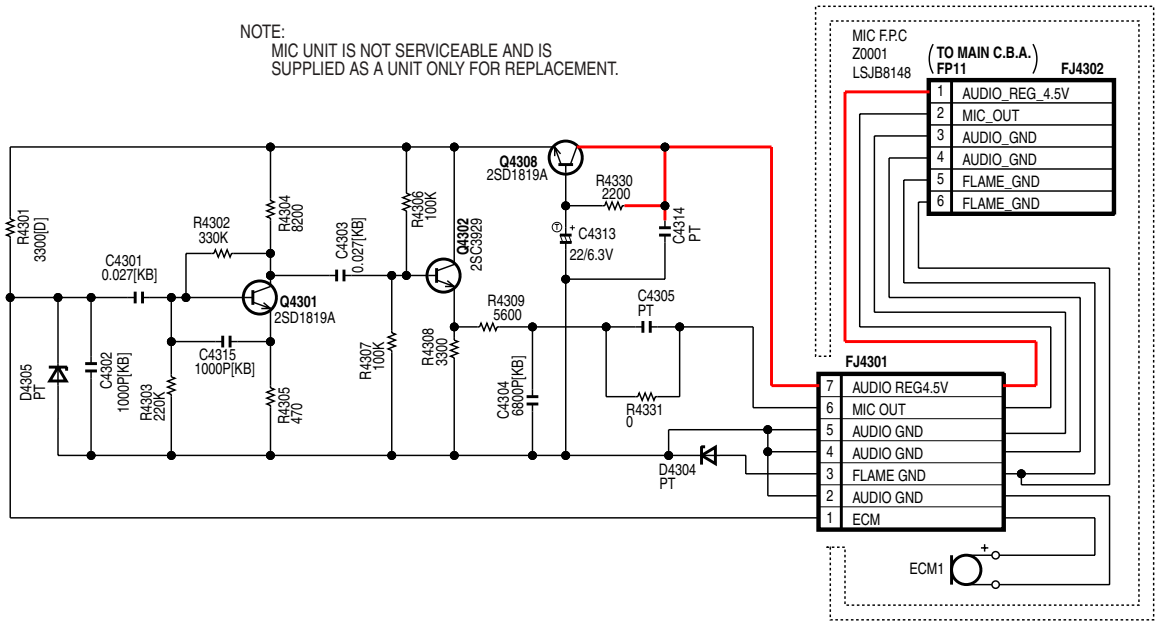

BATTERY CAT

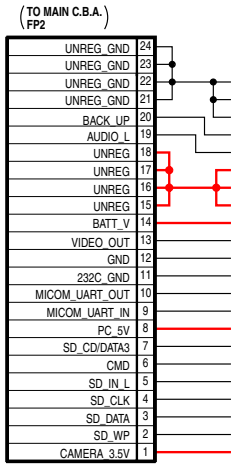

NOTE: For placing a purchase order of the parts, be sure to use the part number listed in the parts list. Do not use the part number on this diagram.

NOTE:
FOR SCHEMATIC DIAGRAM AND CIRCUIT BOARD LAYOUT NOTES, REFER TO BEGINNING OF SCHEMATIC SECTION.

COMPARISON CHART OF MODELS & MARKS

MODEL	MARK
PV-L452	A
PV-L652	B
Not Used	PT

BATTERY CATCHER UNIT

"FOR REFERENCE ONLY"

NOTE:
BATTERY CATCHER UNIT IS NOT SERVICEABLE AND IS SUPPLIED AS A UNIT ONLY FOR REPLACEMENT.

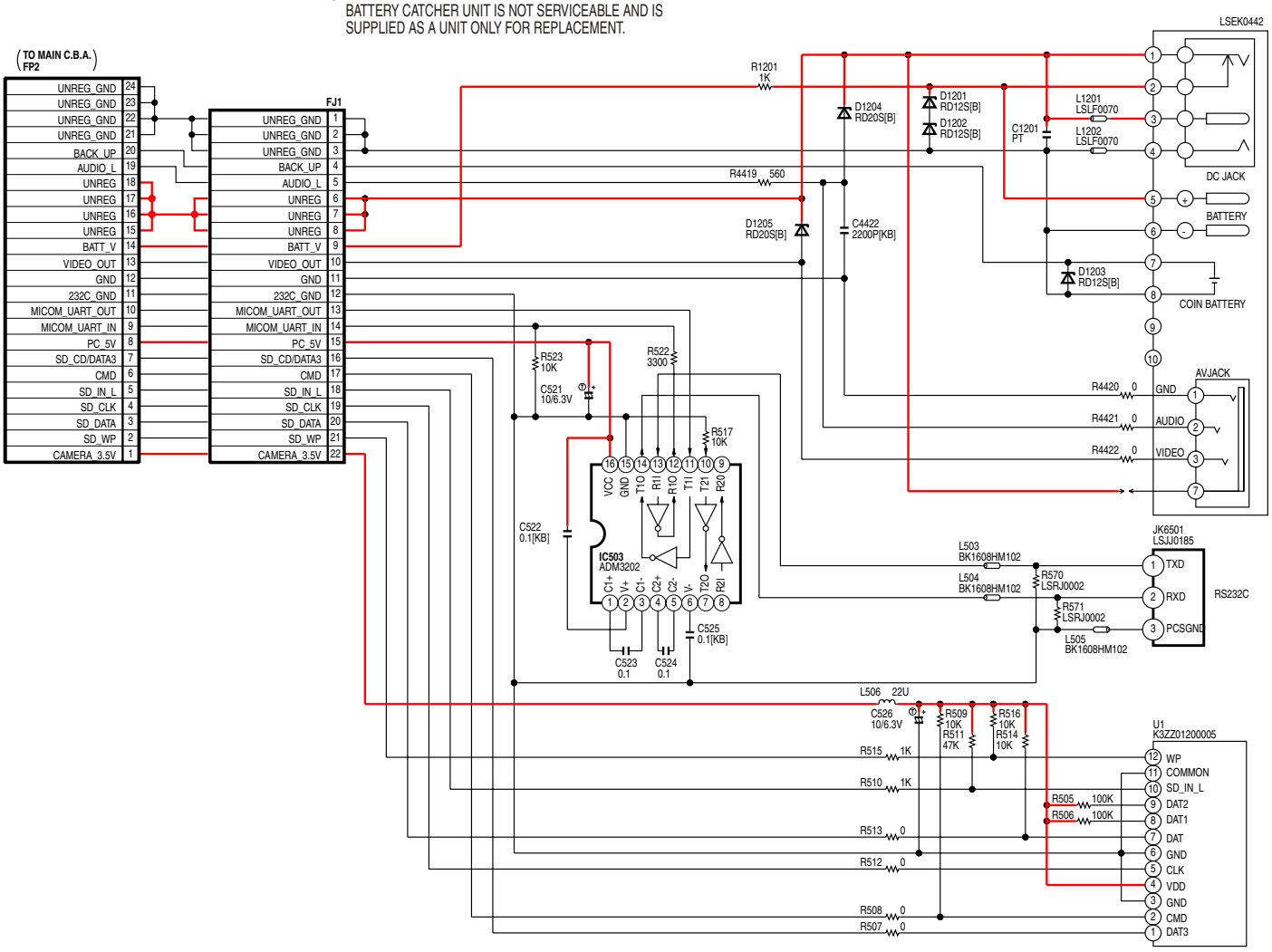

7.9. INTERCONNECTION SCHEMATIC DIAGRAM

INTERCONNECTION SCHEMATIC DIAGRAM

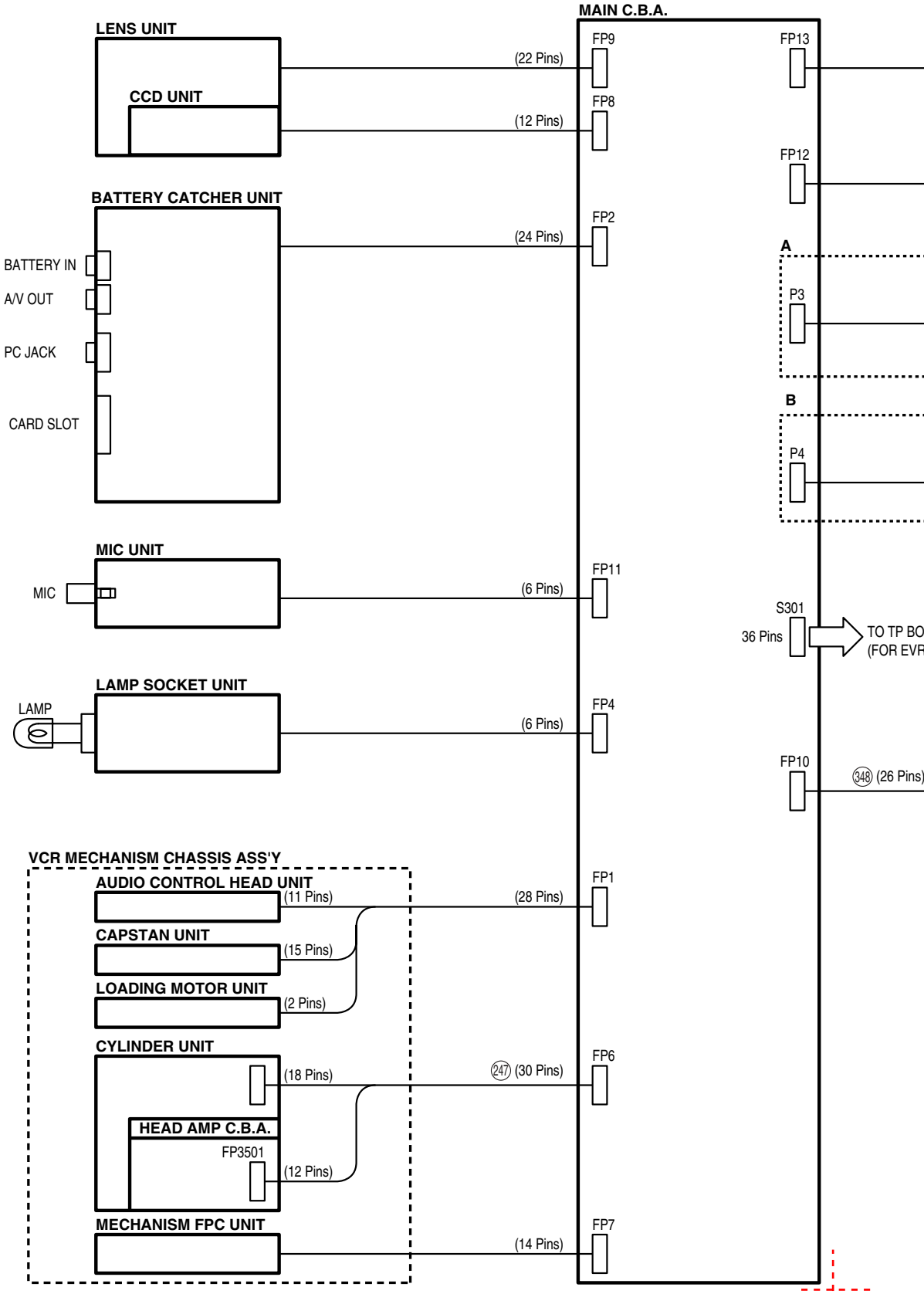

NOTE: For placing a purchase order of the parts,
be sure to use the part number listed in the parts list.
Do not use the part number on this diagram.

NOTE:
FOR SCHEMATIC DIAGRAM AND CIRCUIT BOARD LAYOUT NOTES,
REFER TO BEGINNING OF SCHEMATIC SECTION.

COMPARISON CHART OF MODELS & MARKS

MODEL	MARK
PV-L452	A
PV-L652	B
Not Used	PT

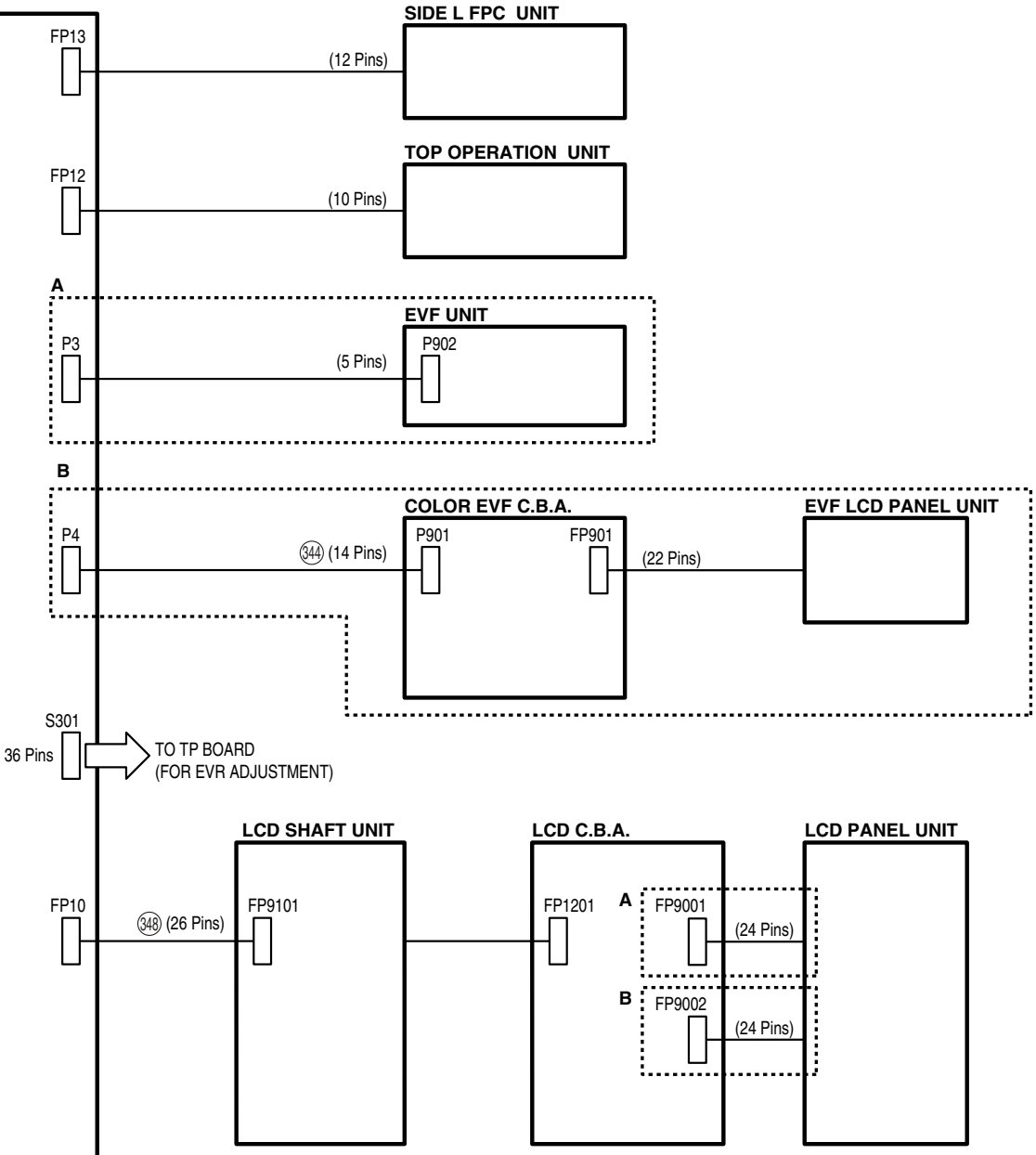

PV-L452, PV-L652
INTERCONNECTION SCHEMATIC DIAGRAM

MAIN C.B.A.

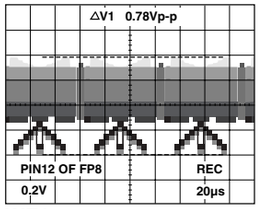

WF1

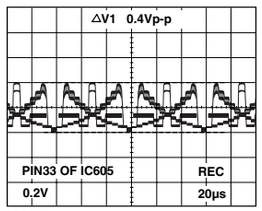

WF2

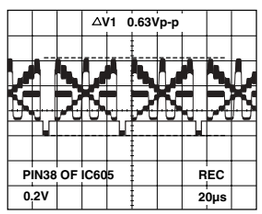

WF3

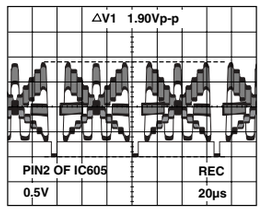

WF4

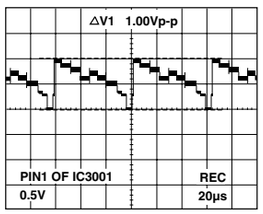

WF5

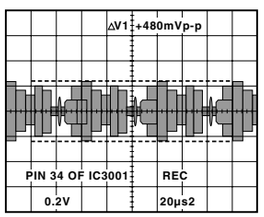

WF6

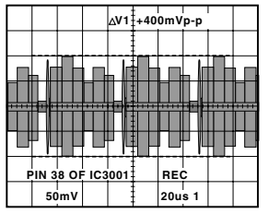

WF7

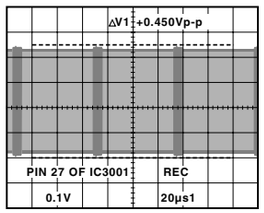

WF8

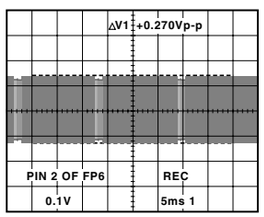

WF9

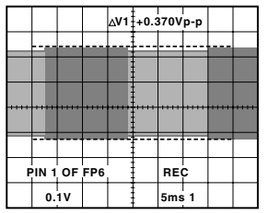

WF10

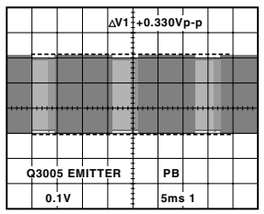

WF11

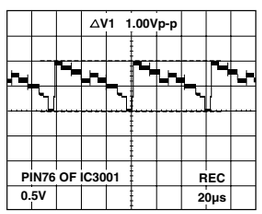

WF12

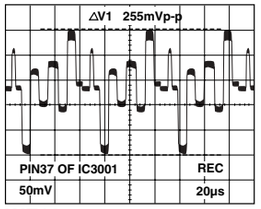

WF13

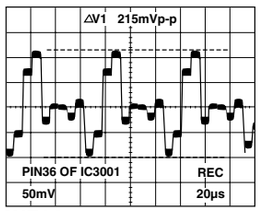

WF14

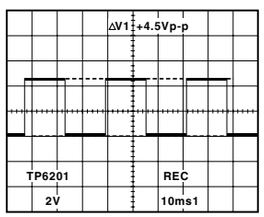

WF15

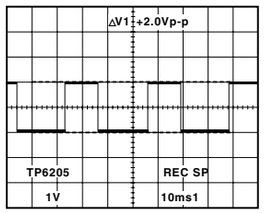

WF16

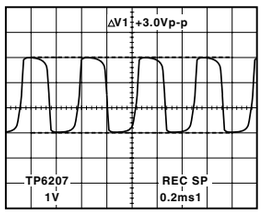

WF17

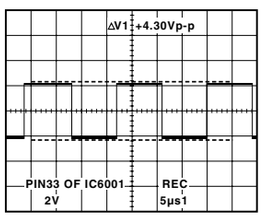

WF18

LCD C.B.A.

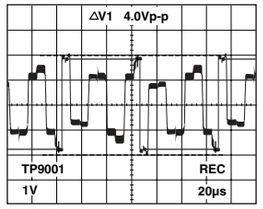

WF19

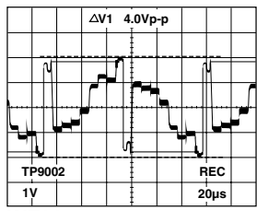

WF20

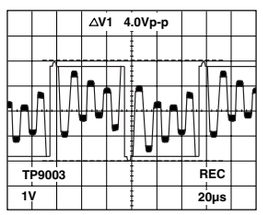

WF21

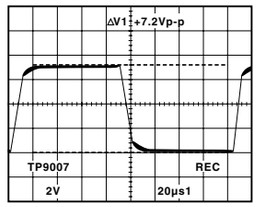

WF22

NOTE:
FOR SCHEMATIC DIAGRAM AND CIRCUIT BOARD LAYOUT NOTES, REFER TO BEGINNING OF SCHEMATIC SECTION.

OVERALL BLOCK DIAGRAM

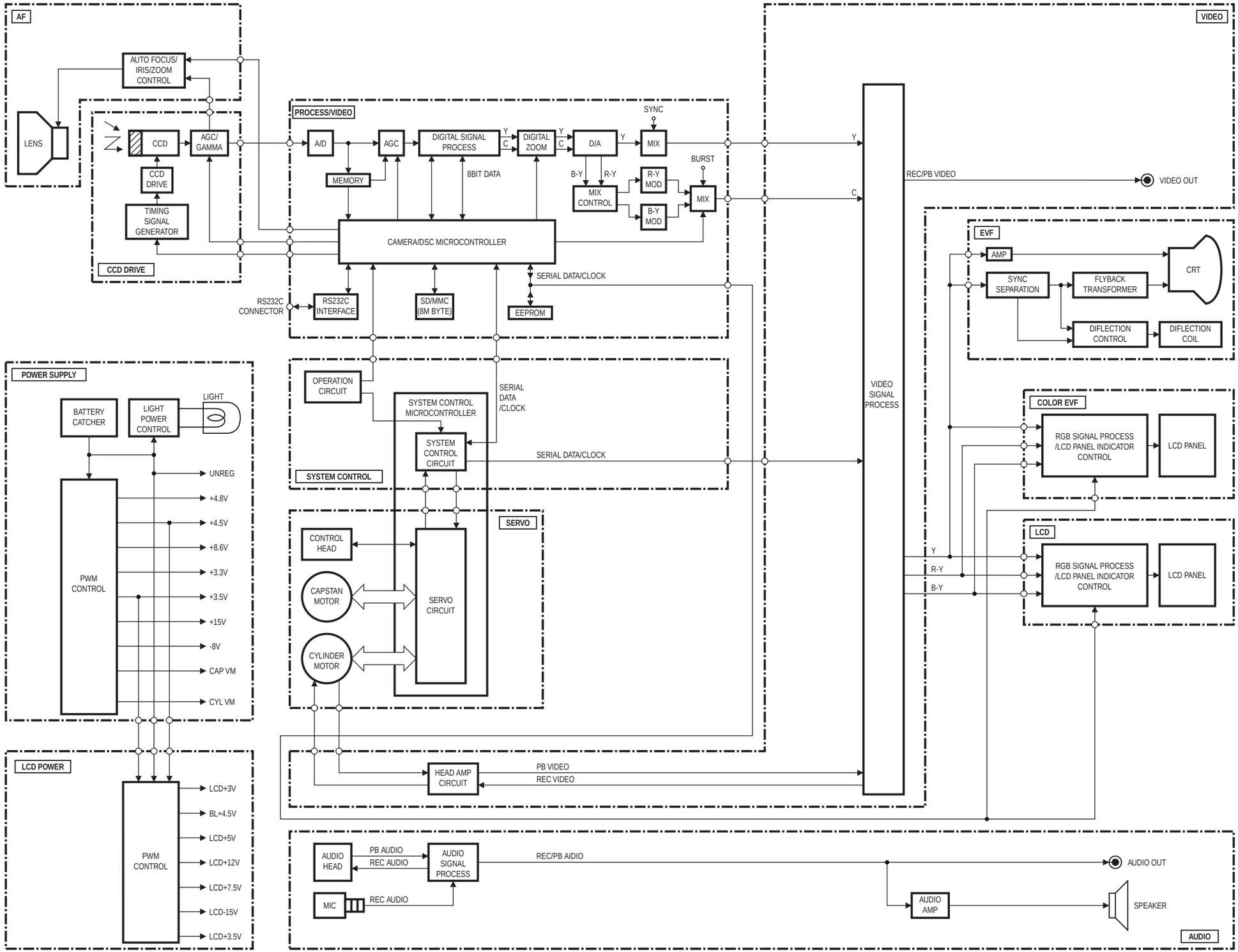

CCD DRIVE BLOCK DIAGRAM

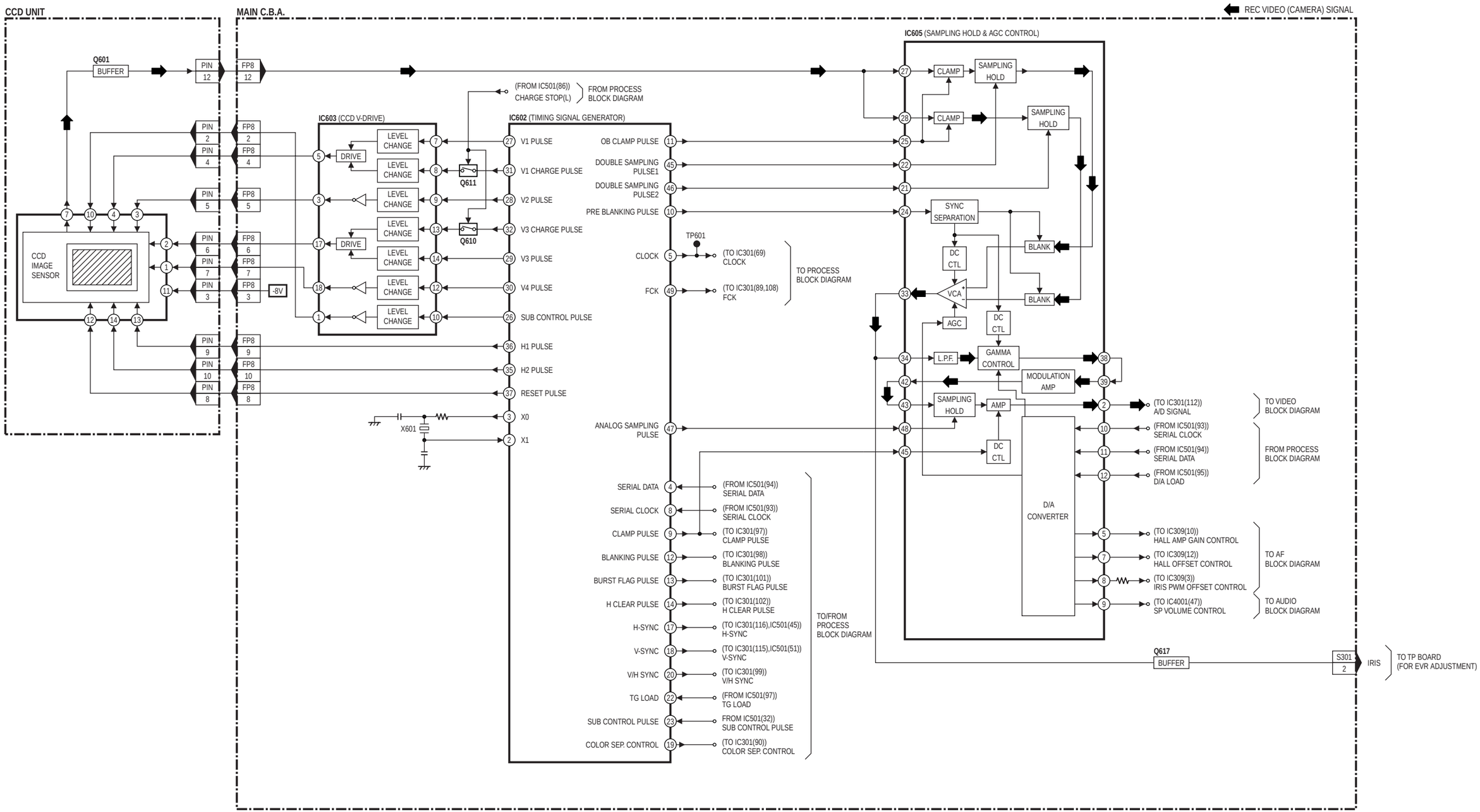

PROCESS BLOCK DIAGRAM

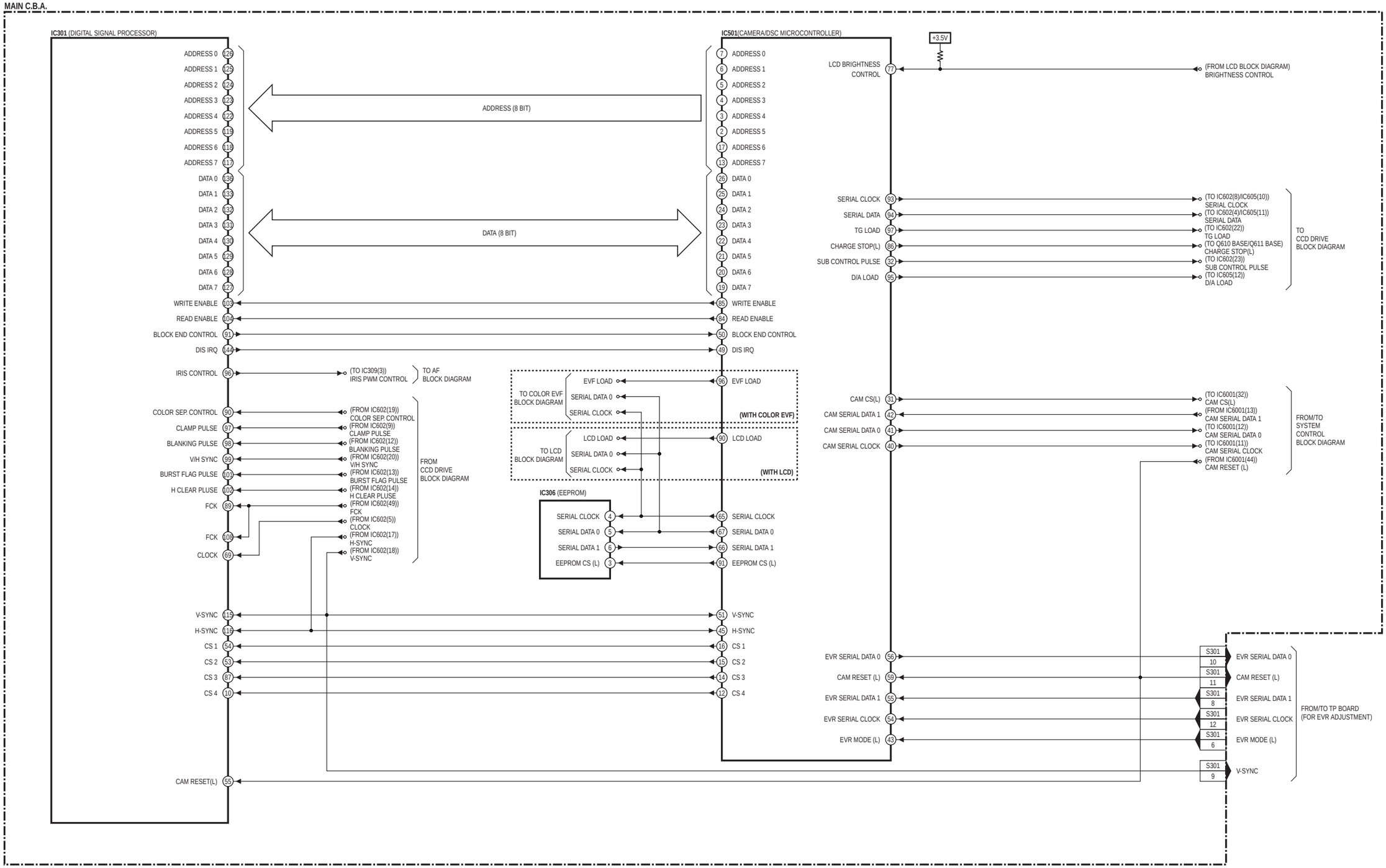

VIDEO BLOCK DIAGRAM

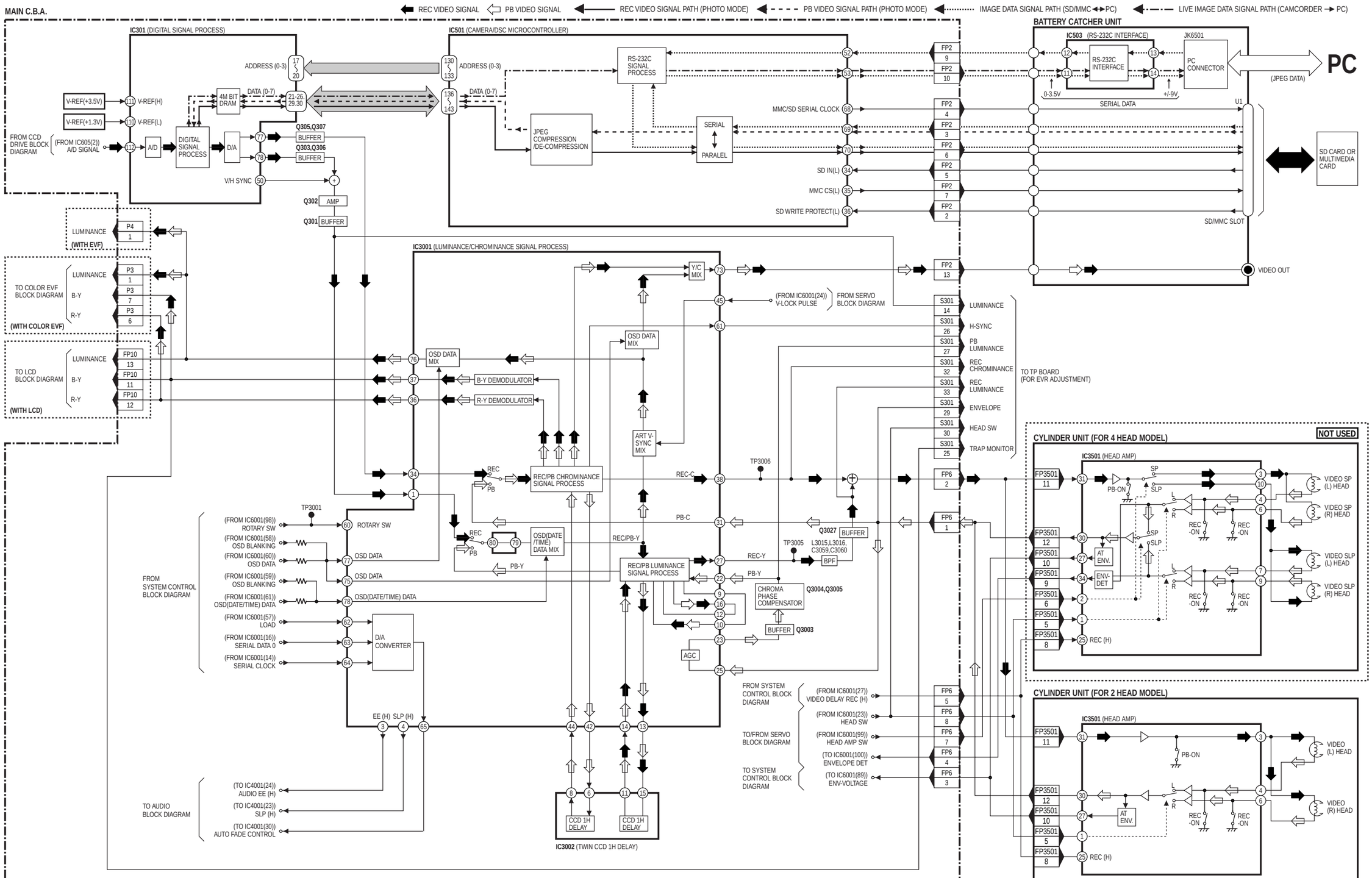

AUDIO BLOCK DIAGRAM

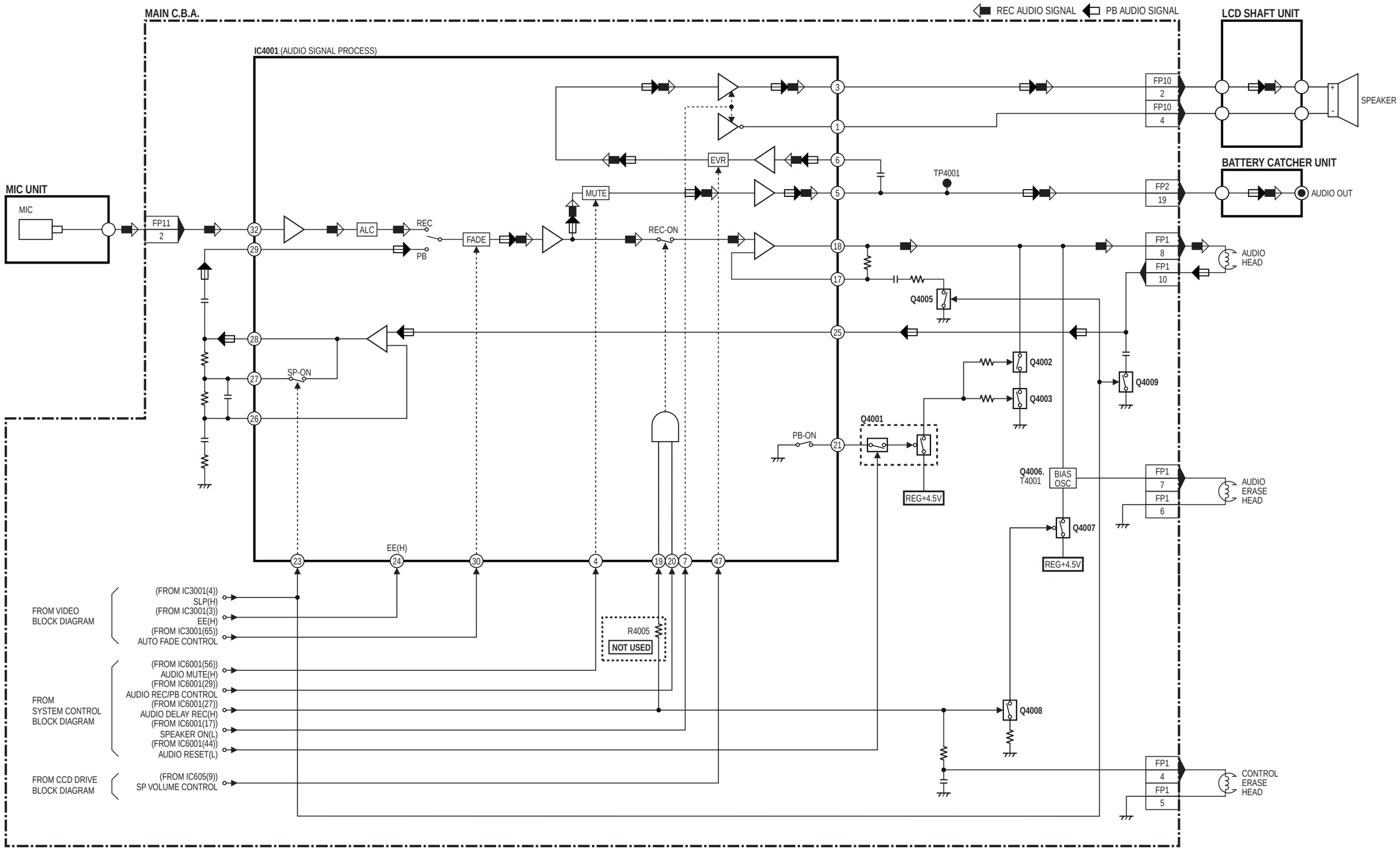

SYSTEM CONTROL BLOCK DIAGRAM

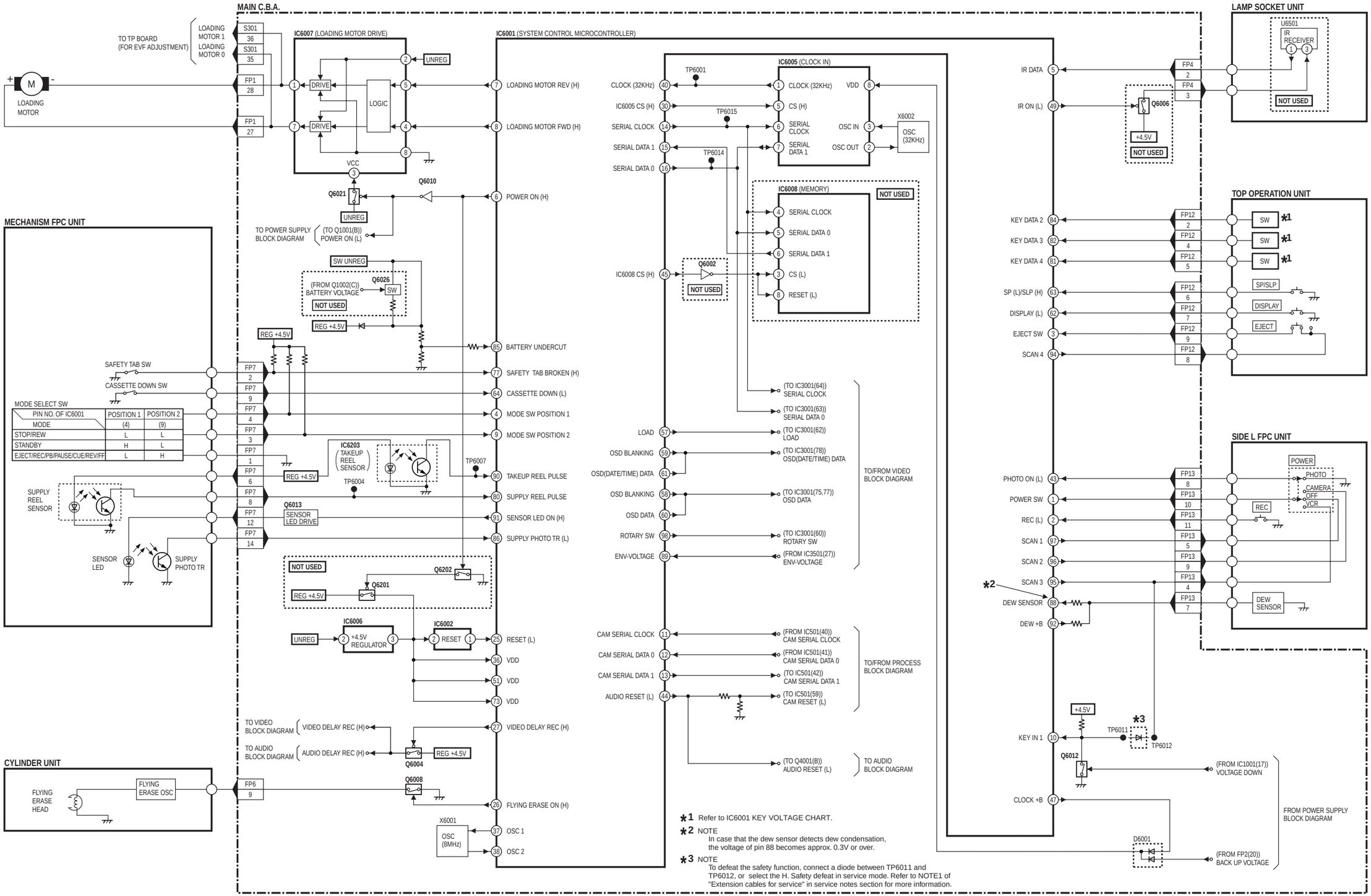

*1 Refer to IC6001 KEY VOLTAGE CHART.

*2 NOTE
In case that the dew sensor detects dew condensation, the voltage of pin 88 becomes approx. 0.3V or over.

*3 NOTE
To defeat the safety function, connect a diode between TP6011 and TP6012, or select the H. Safety defeat in service mode. Refer to NOTE1 of "Extension cables for service" in service notes section for more information.

IC6001 KEY VOLTAGE CHART

(VCR MODE)

TERMINAL VOLTAGE	OPERATION BUTTON		
	KEY DATA 2 (PIN 84)	KEY DATA 3 (PIN 82)	KEY DATA 4 (PIN 81)
3.42~3.78V	STILL	---	---
2.52~2.88V	FF/ SEARCH	---	---
1.62~1.98V	REW/ SEARCH	---	MENU
0.72~1.08V	PLAY	---	DOWN
0~0.18V	STOP	---	UP

(PHOTO REC MODE)

TERMINAL VOLTAGE	OPERATION BUTTON		
	KEY DATA 2 (PIN 84)	KEY DATA 3 (PIN 82)	KEY DATA 4 (PIN 81)
3.42~3.78V	---	---	---
2.52~2.88V	---	---	MANUAL FORCUS
1.62~1.98V	---	---	MENU
0.72~1.08V	TO PHOTO THUMBNAIL MODE	LIGHT	DOWN
0~0.18V	---	B.LIGHT	UP

(CAMERA EIS MODE)

TERMINAL VOLTAGE	OPERATION BUTTON		
	KEY DATA 2 (PIN 84)	KEY DATA 3 (PIN 82)	KEY DATA 4 (PIN 81)
3.42~3.78V	STILL/ STROBE	---	---
2.52~2.88V	D.ZOOM	---	MANUAL FORCUS
1.62~1.98V	FADE	---	MENU
0.72~1.08V	---	LIGHT	DOWN
0~0.18V	EIS	B.LIGHT	UP

(PHOTO THUMBNAIL MODE)

TERMINAL VOLTAGE	OPERATION BUTTON		
	KEY DATA 2 (PIN 84)	KEY DATA 3 (PIN 82)	KEY DATA 4 (PIN 81)
3.42~3.78V	---	---	---
2.52~2.88V	SELECT+	---	---
1.62~1.98V	SELECT-	---	---
0.72~1.08V	M.PLAY	LIGHT	---
0~0.18V	TO PHOTO REC MODE	B.LIGHT	---

(CAMERA WIPE MODE)

TERMINAL VOLTAGE	OPERATION BUTTON		
	KEY DATA 2 (PIN 84)	KEY DATA 3 (PIN 82)	KEY DATA 4 (PIN 81)
3.42~3.78V	START	---	---
2.52~2.88V	SELECT+	---	MANUAL FORCUS
1.62~1.98V	SELECT-	---	MENU
0.72~1.08V	MODE	LIGHT	DOWN
0~0.18V	TO CAMERA EIS MODE	B.LIGHT	UP

(PHOTO PLAY MODE)

TERMINAL VOLTAGE	OPERATION BUTTON		
	KEY DATA 2 (PIN 84)	KEY DATA 3 (PIN 82)	KEY DATA 4 (PIN 81)
3.42~3.78V	---	---	---
2.52~2.88V	SELECT+	---	---
1.62~1.98V	SELECT-	---	MENU
0.72~1.08V	---	LIGHT	DOWN
0~0.18V	TO PHOTO THUMBNAIL MODE	---	UP

SERVO BLOCK DIAGRAM

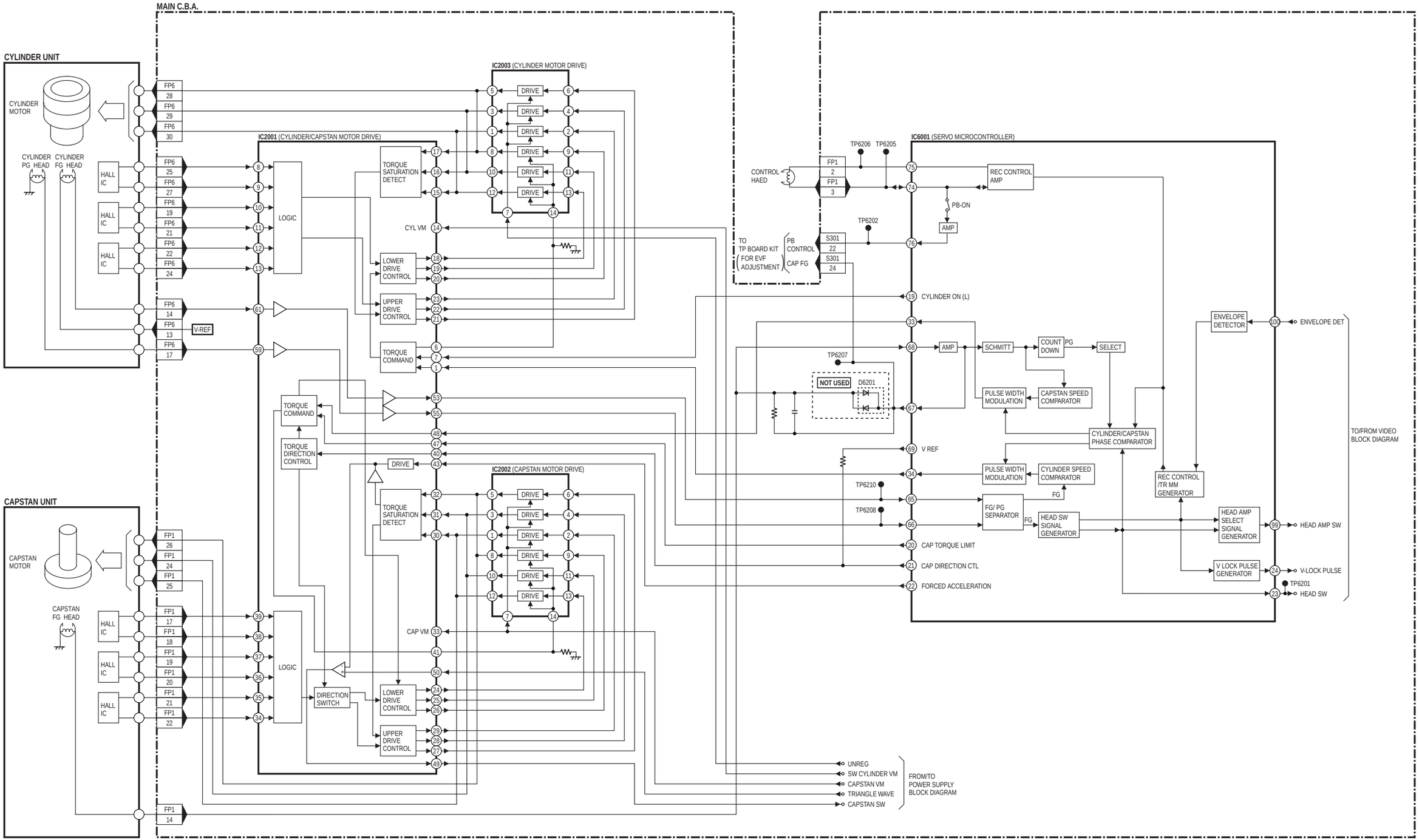

AF BLOCK DIAGRAM

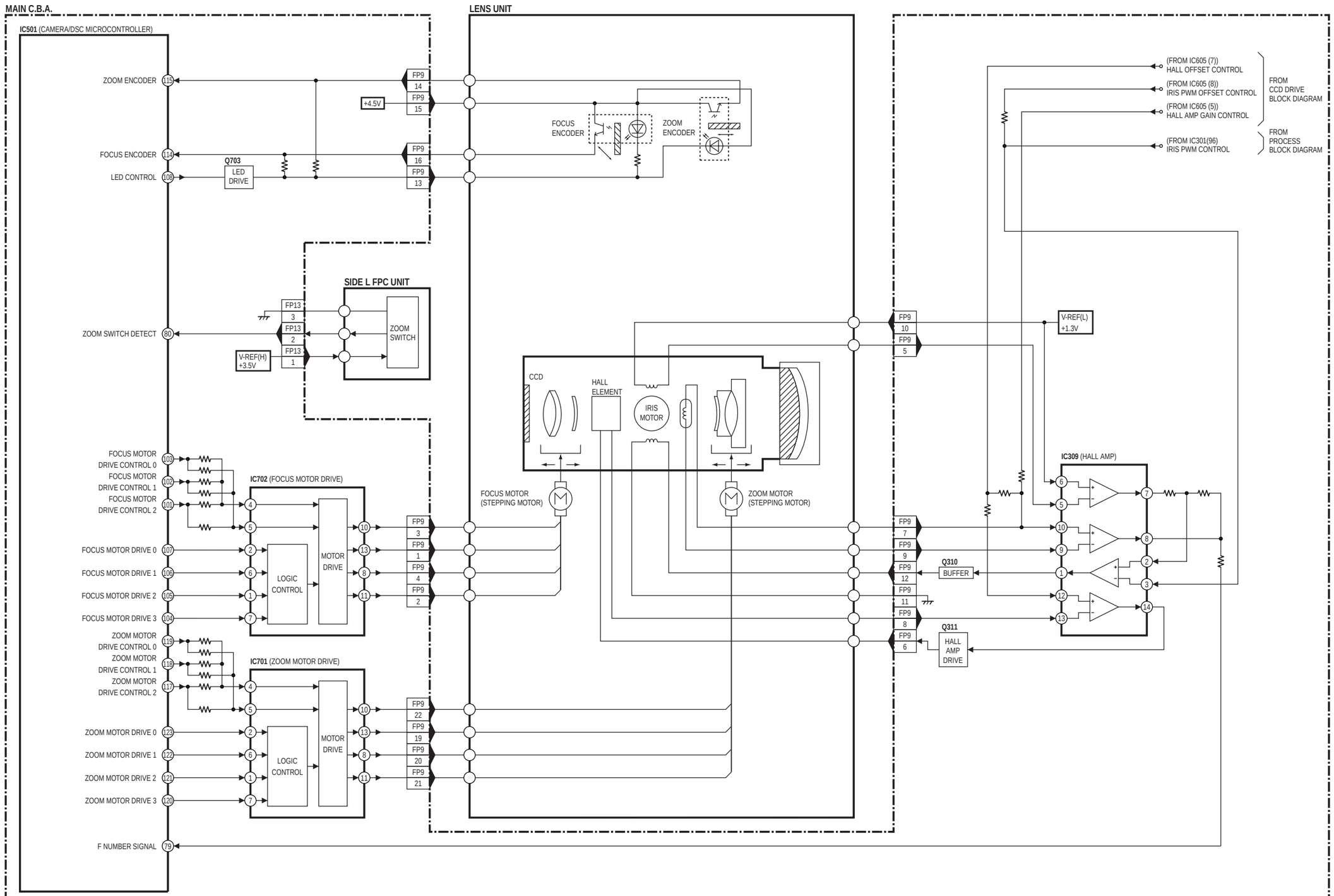

POWER SUPPLY BLOCK DIAGRAM

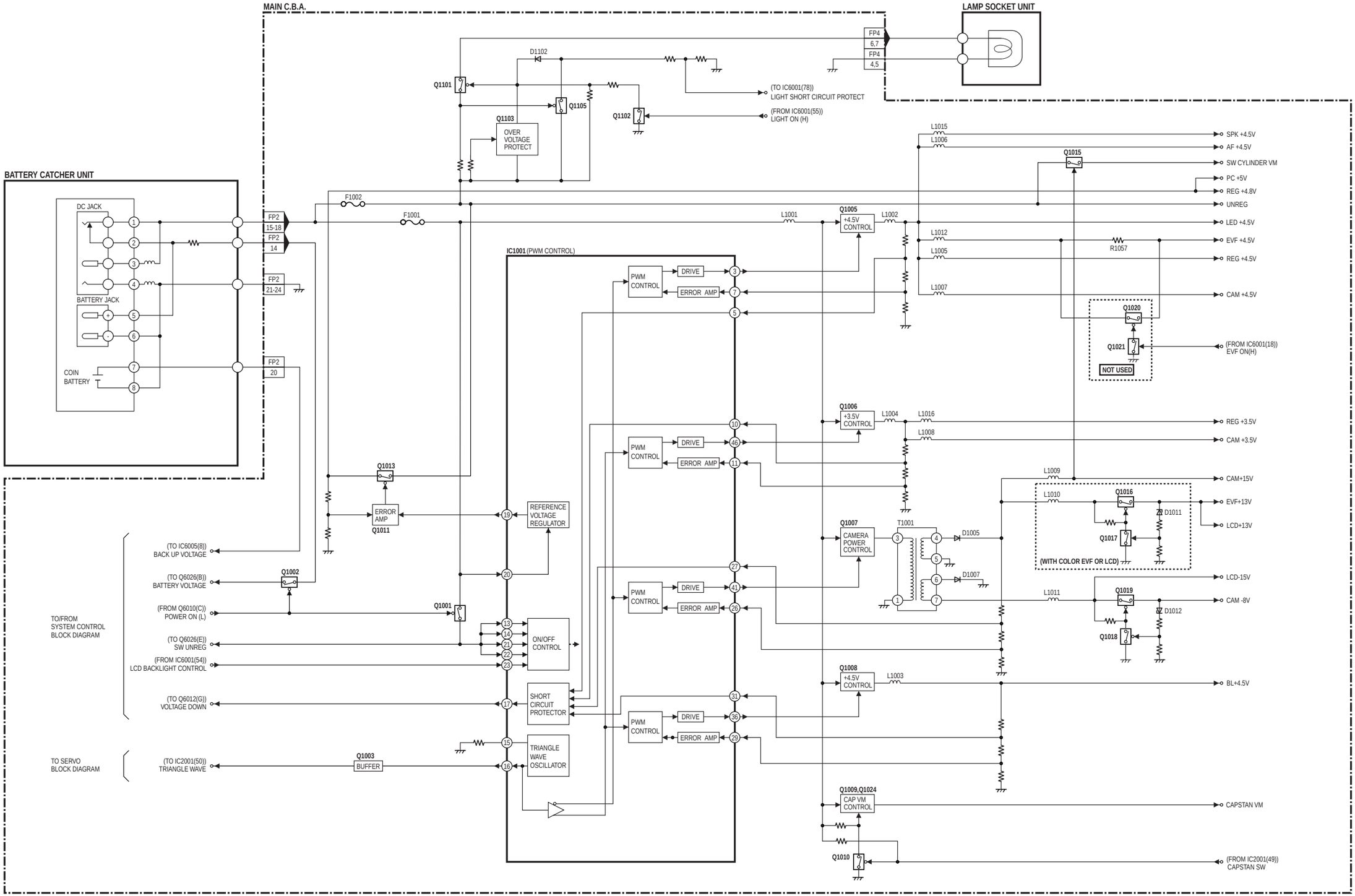

LCD POWER BLOCK DIAGRAM

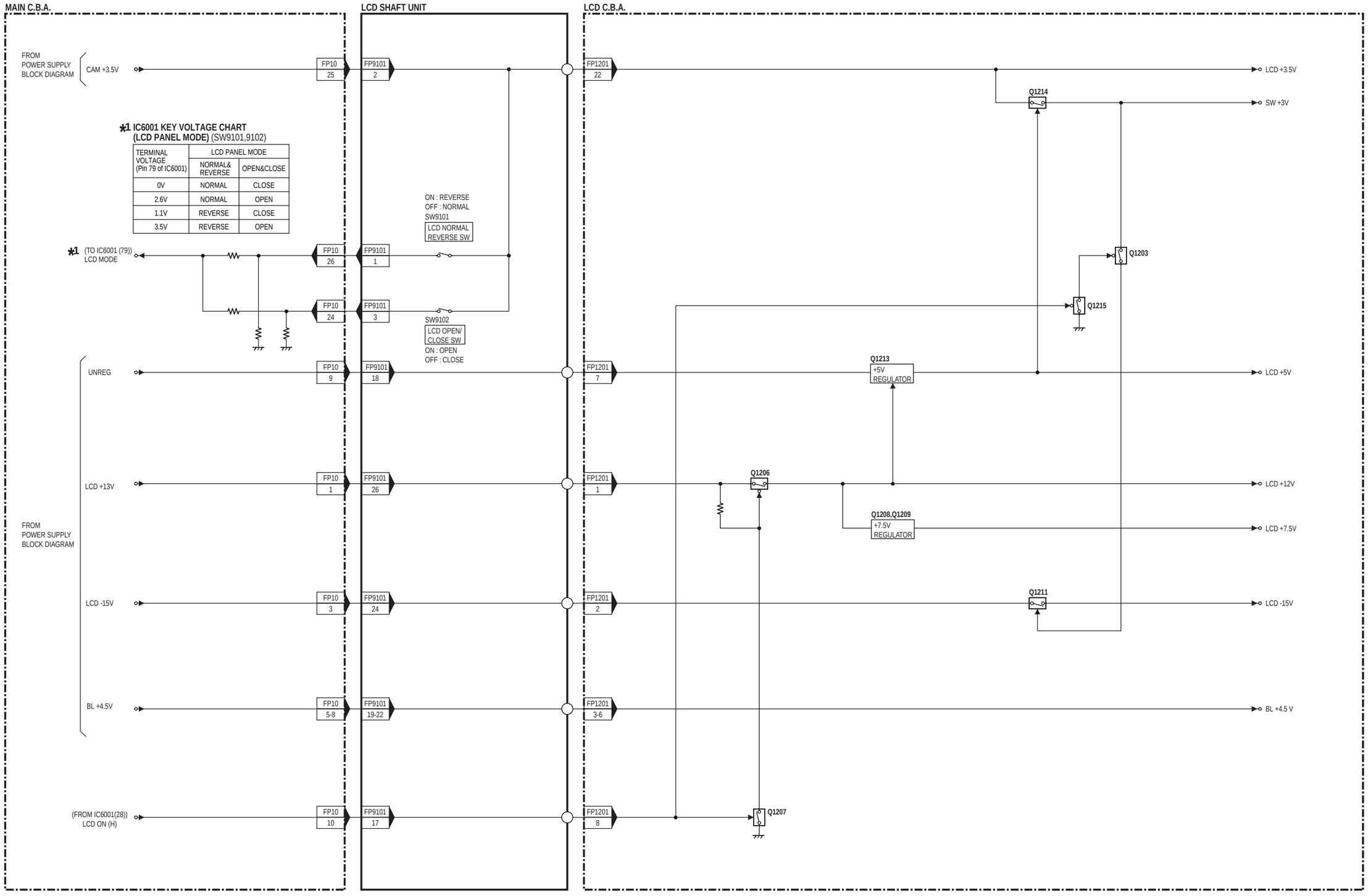

TERMINAL VOLTAGE (Pin 79 of IC6001)	LCD PANEL MODE	
	NORMAL& REVERSE	OPEN&CLOSE
0V	NORMAL	CLOSE
2.6V	NORMAL	OPEN
1.1V	REVERSE	CLOSE
3.5V	REVERSE	OPEN

LCD BLOCK DIAGRAM

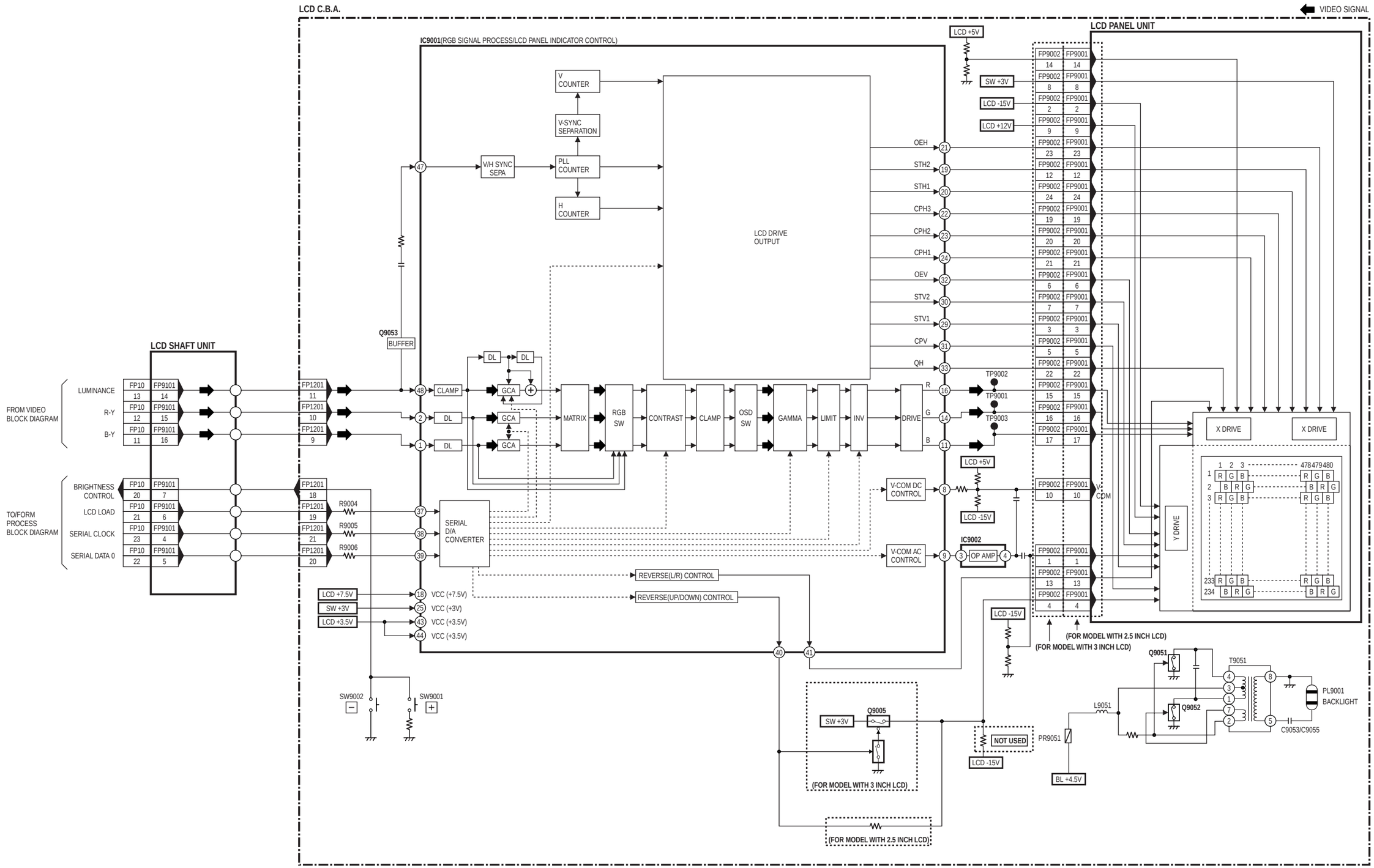

COLOR EVF BLOCK DIAGRAM (Model: PV-L652)

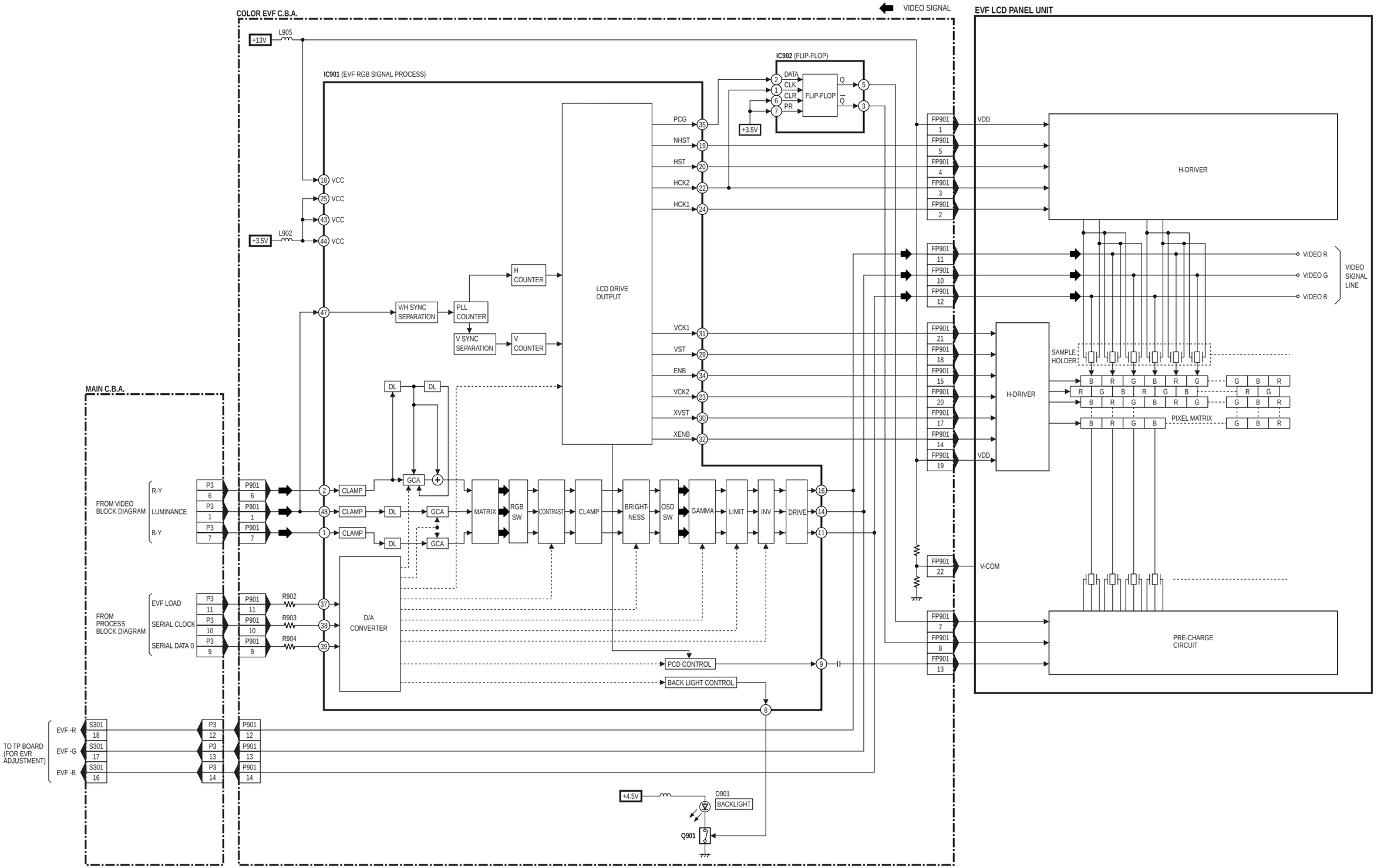

TROUBLESHOOTING HINTS FOR SD/MultiMediaCard Error

The following ERROR No. will be displayed on the Camcorder LCD Monitor or EVF Monitor when an Error occurred.

ERROR No.	Error Description	Possible solution
U11	Initial processing with IC501 right after the care detection couldn't be done.	May be caused by bad contact between SD/Multi Media Card and IC501 (Camera/DSC Microcontroller.) Check following items and repair or replace if necessary. ・Replace Battery Catcher Unit (Ref No. 30) ・Replace IC501 (Camera/DSC Microcontroller) ・Repair contact (solder) of signal lines between IC501 and FP2 connector(Pin 2 ～ 7) on the Main C.B.A.
U12	The mode switching of the card and initial processing can't be done. (May be caused by interruption, such as AC OFF, or removal of the SD/Multi Media Card during accessing the system area of the memory address.)	The SD/Multi Media Card is defective. Use a new SD/Multi Media Card. When a defect still goes on, may be caused by bad contact between SD/Multi Media Card and IC501 (Camera/DSC Microcontroller.) Check following items and repair or replace if necessary. ・Replace Battery Catcher Unit (Ref No. 30) ・Replace IC501 (Camera/DSC Microcontroller) ・Repair contact (solder) of signal lines between IC501 and FP2 connector(Pin 2 ～ 7) on the Main C.B.A.
U13	Information from the card couldn't be acquired. (May be caused by interruption, such as AC OFF, or removal of the SD/Multi Media Card during accessing the system area of the memory address.)	The SD/Multi Media Card is defective. Use a new SD/Multi Media Card.
U14	Communication Error (SD/Multi Media Card <--> Camcorder)	Install a new SD/Multi Media Card in the Camcorder. ↓ Does the camcorder works OK ? NG → May be caused by IC501 (Camera Micro-controller) malfunction. Replace IC501 on the Main C.B.A. ↓ OK Caused by SD/Multi Media Card error. Format the original SD/Multi Media Card. If still NG, the original SD/ Multi Media Card is defective. Use a new one.
U15	No SD/Multi Media Card Memory	Delete the data in the SD/Multi Media Card which was recorded by other compatible products. OR Use a new SD/Multi Media Card.
U16	Captured image (ctg folder) limit exceeded (Max. 215 folders)	Delete the data in the SD/Multi Media Card which was recorded by other compatible products. OR Use a new SD/Multi Media Card.
U17	Captured image (JPEG file) limit exceeded (Max. 697 files)	Delete the data in the SD/Multi Media Card which was recorded by other compatible products. OR Use a new SD/Multi Media Card.
U30	Error other than above	May be caused by IC501 (Camera Microcontroller) malfunction. Replace IC501 on the Main C.B.A.

Note: When the Battery Catcher Unit connector is disconnected from FP2 connector on the Main C.B.A., "NO CARD" appears on-screen. Connect the Battery Catcher Unit connector firmly.

MAIN C.B.A. LSEP8140A1 (A) / LSEP8140B1 (B)

*1 NOTE
TO DEFEAT THE SAFETY FUNCTION, CONNECT A DIODE BETWEEN TP6011 AND TP6012, OR SELECT THE H. SAFETY DEFEAT IN SERVICE MODE. REFER TO NOTE1 OF "EXTENSION CABLES FOR SERVICE" IN SERVICE NOTES SECTION FOR MORE INFORMATION.

*2 IC501 and IC6001 replacement note:
IC501 and IC6001 are supplied together only as a Microcontroller Kit (LSUC0005).
Microcontroller Kit consists of IC6001, IC501, and Instruction Sheet.
When replacing either IC6001 or IC501, be sure to replace both IC6001 and IC501.
When R6001 is found on the Main C.B.A., be sure to remove it at the same time.
Otherwise, normal operation may not be possible.

NOTE:
CIRCUIT BOARD LAYOUT SHOWS COMPONENTS INSTALLED FOR VARIOUS MODELS. FOR PROPER PARTS CONTENT FOR THE MODEL YOU ARE SERVICING, PLEASE REFER TO THE SCHEMATIC DIAGRAM AND PARTS LIST.

NOTE:
CIRCUIT BOARD LAYOUT INCLUDES COMPONENTS WHICH ARE NOT USED.

NOTE:
FOR SCHEMATIC DIAGRAM AND CIRCUIT BOARD LAYOUT NOTES, REFER TO BEGINNING OF SCHEMATIC SECTION.

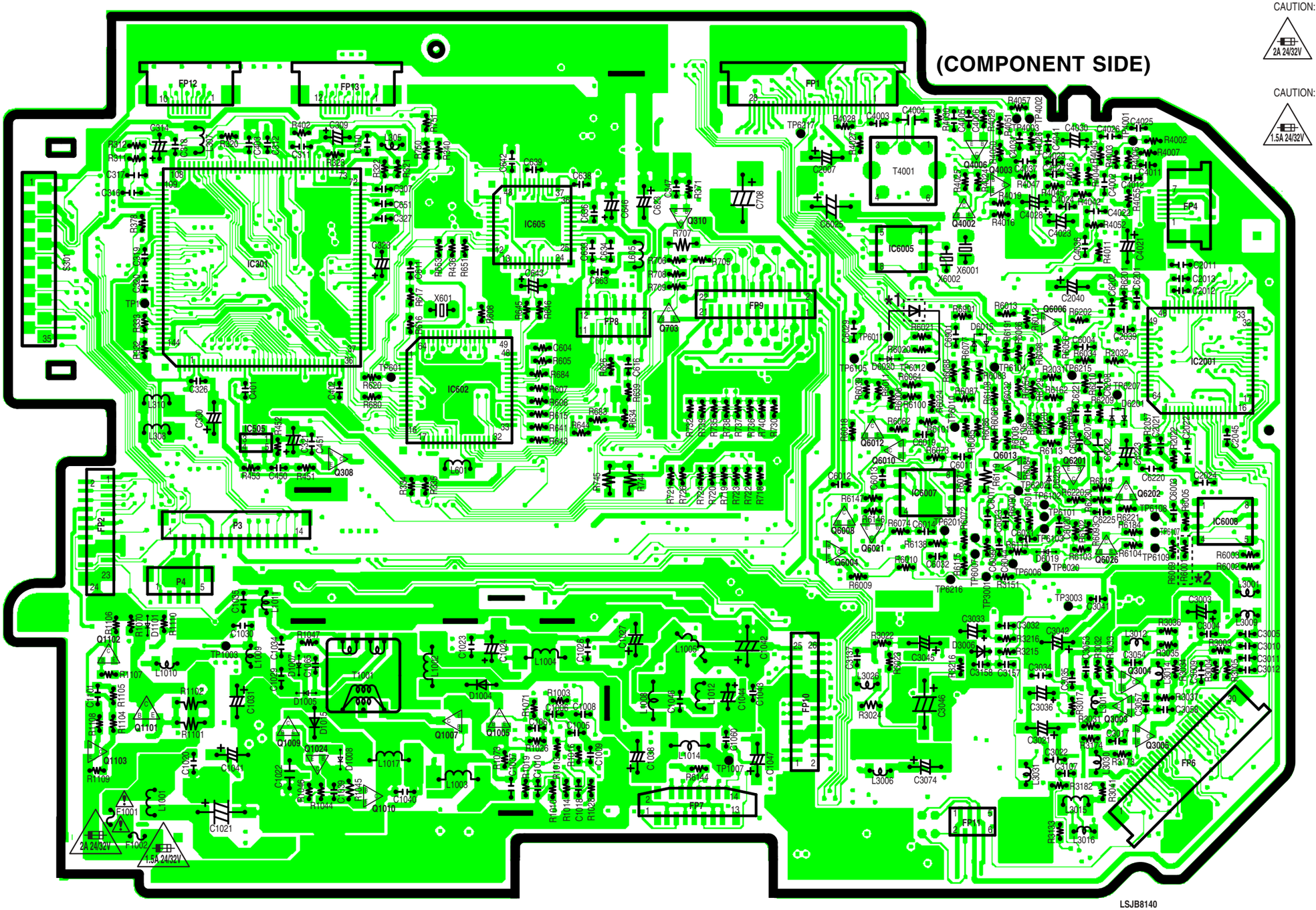

CAUTION: FOR CONTINUED PROTECTION AGAINST FIRE HAZARD, REPLACE ONLY WITH THE SAME TYPE 2A 24/32V FUSE.
ATTENTION: POUR UNE PROTECTION CONTINUE LES RISQUES D' INCENDIE N' UTILISERQUE DES FUSIBLE DE MÊME TYPE 2A 24/32V

CAUTION: FOR CONTINUED PROTECTION AGAINST FIRE HAZARD, REPLACE ONLY WITH THE SAME TYPE 1.5A 24/32V FUSE.
ATTENTION: POUR UNE PROTECTION CONTINUE LES RISQUES D' INCENDIE N' UTILISERQUE DES FUSIBLE DE MÊME TYPE 1.5A 24/32V

IMPORTANT SAFETY NOTICE:
COMPONENTS IDENTIFIED BY THE SIGN ⚠ HAVE SPECIAL CHARACTERISTICS IMPORTANT FOR SAFETY. WHEN REPLACING ANY OF THESE COMPONENTS, USE ONLY THE SPECIFIED PARTS.

COMPARISON CHART OF MODELS & MARKS

MODEL	MARK
PV-L452	A
PV-L652	B

NOTE: MULTILAYER C.B.A.
THIS C.B.A. IS Multi-Layer C.B.A. THIS CIRCUIT BOARD SHOWS COMPONENT LAYOUT-PATTERN FOR COMPONENT SIDE AND FOIL SIDE. LAYOUT PATETRNS ARE SINGLE PATTERN FOR EACH SIDE THAT MAKE EASY TO SIGHT THE COMPONENT LAYOUT.

LSJB8140

MAIN C.B.A. LSEP8140A1 (A) / LSEP8140B1 (B)

*2 IC501 and IC6001 replacement note:
IC501 and IC6001 are supplied together only as a Microcontroller Kit (LSUC0005).
Microcontroller Kit consists of IC6001, IC501, and Instruction Sheet.
When replacing either IC6001 or IC501, be sure to replace both IC6001 and IC501.
When R6001 is found on the Main C.B.A., be sure to remove it at the same time.
Otherwise, normal operation may not be possible.

NOTE:
CIRCUIT BOARD LAYOUT SHOWS COMPONENTS INSTALLED FOR VARIOUS MODELS.
FOR PROPER PARTS CONTENT FOR THE MODEL YOU ARE SERVICING,
PLEASE REFER TO THE SCHEMATIC DIAGRAM AND PARTS LIST.

NOTE:
CIRCUIT BOARD LAYOUT INCLUDES COMPONENTS WHICH ARE NOT USED.

NOTE:
FOR SCHEMATIC DIAGRAM AND CIRCUIT BOARD LAYOUT NOTES,
REFER TO BEGINNING OF SCHEMATIC SECTION.

COMPARISON CHART OF MODELS & MARKS

MODEL	MARK
PV-L452	A
PV-L652	B

NOTE: MULTILAYER C.B.A.
THIS C.B.A. IS Multi-Layer C.B.A. THIS CIRCUIT BOARD SHOWS COMPONENT LAYOUT-PATTERN FOR COMPONENT SIDE AND FOIL SIDE. LAYOUT PATETRNS ARE SINGLE PATTERN FOR EACH SIDE THAT MAKE EASY TO SIGHT THE COMPONENT LAYOUT.

(FOIL SIDE)

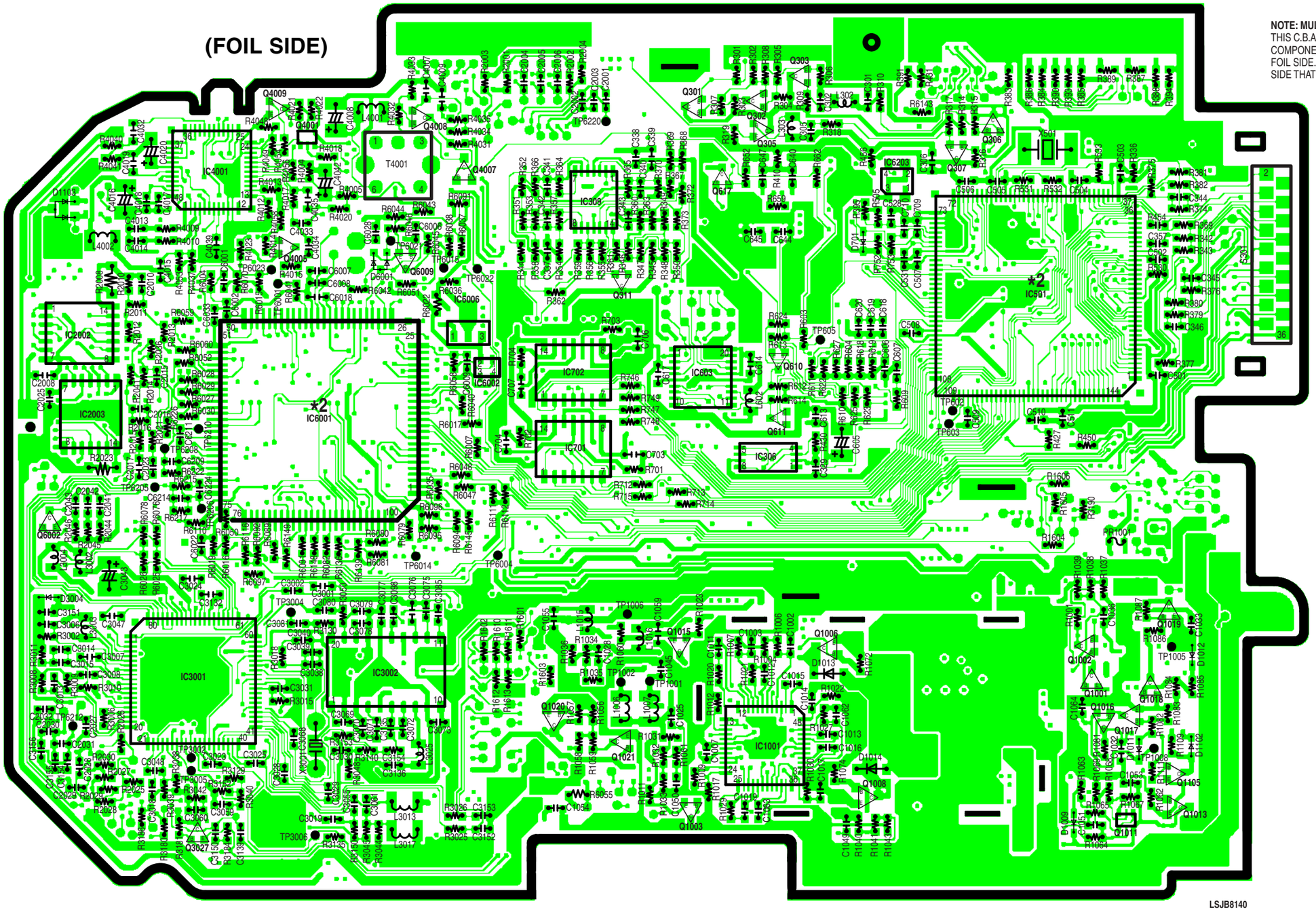

COLOR EVF C.B.A. LSEP8113B1 (B)

(COMPONENT SIDE)

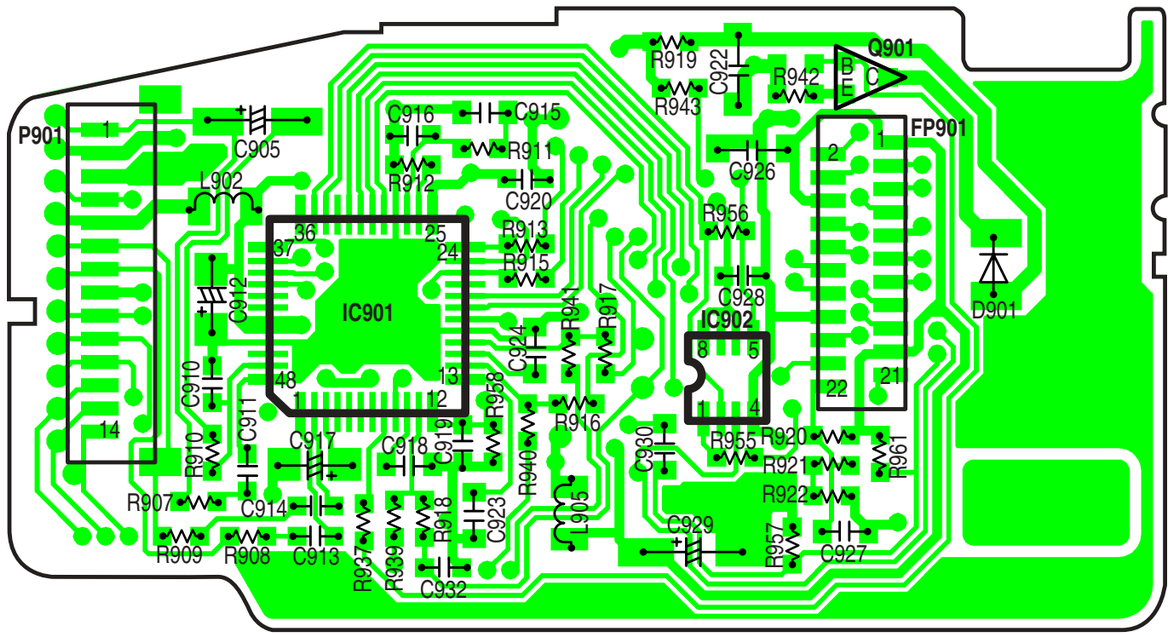

(DUAL PATTERNS)

(FOIL SIDE)

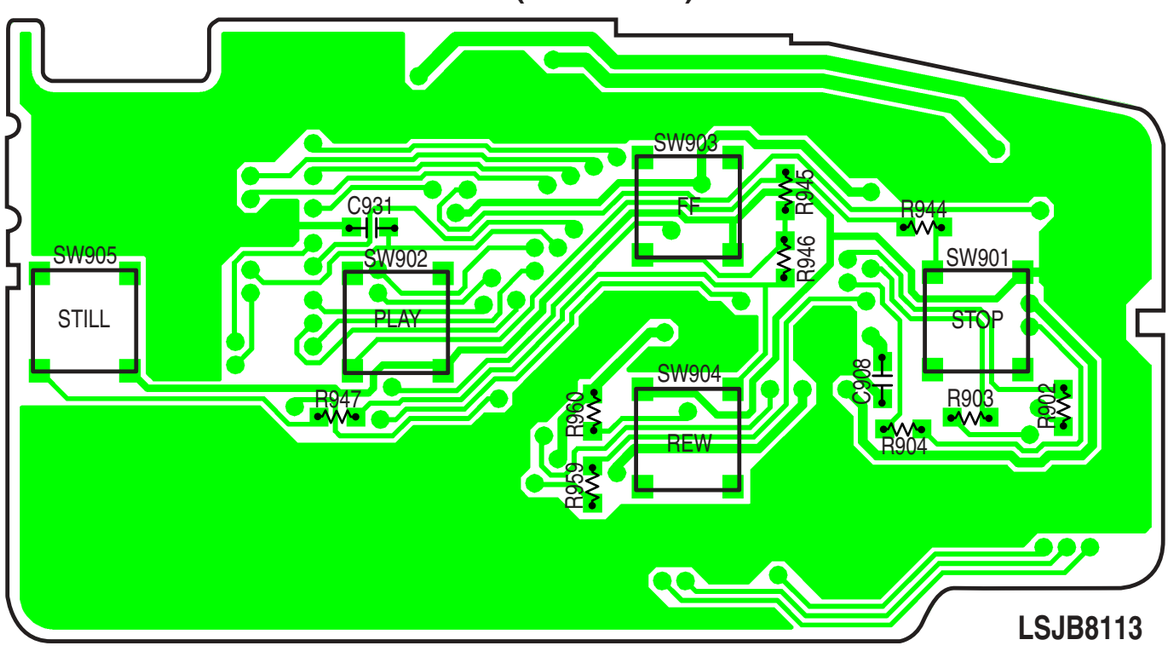

(DUAL PATTERNS)

COMPARISON CHART OF MODELS & MARKS

MODEL	MARK
PV-L452	A
PV-L652	B

NOTE:
FOR SCHEMATIC DIAGRAM AND CIRCUIT BOARD LAYOUT NOTES,
REFER TO BEGINNING OF SCHEMATIC SECTION.

NOTE:
CIRCUIT BOARD LAYOUT SHOWS COMPONENTS INSTALLED FOR VARIOUS MODELS.
FOR PROPER PARTS CONTENT FOR THE MODEL YOU ARE SERVICING,
PLEASE REFER TO THE SCHEMATIC DIAGRAM AND PARTS LIST.

NOTE:
CIRCUIT BOARD LAYOUT INCLUDES COMPONENTS WHICH ARE NOT USED.

LCD C.B.A. LSEP8143A1 (A) / LSEP8143B1 (B)

IMPORTANT SAFETY NOTICE:
COMPONENTS IDENTIFIED BY THE SIGN ⚠ HAVE SPECIAL CHARACTERISTICS IMPORTANT FOR SAFETY. WHEN REPLACING ANY OF THESE COMPONENTS, USE ONLY THE SPECIFIED PARTS.

NOTE:
CIRCUIT BOARD LAYOUT SHOWS COMPONENTS INSTALLED FOR VARIOUS MODELS. FOR PROPER PARTS CONTENT FOR THE MODEL YOU ARE SERVICING, PLEASE REFER TO THE SCHEMATIC DIAGRAM AND PARTS LIST.

NOTE:
CIRCUIT BOARD LAYOUT INCLUDES COMPONENTS WHICH ARE NOT USED.

NOTE:
FOR SCHEMATIC DIAGRAM AND CIRCUIT BOARD LAYOUT NOTES, REFER TO BEGINNING OF SCHEMATIC SECTION.

COMPARISON CHART OF MODELS & MARKS

MODEL	MARK
PV-L452	A
PV-L652	B

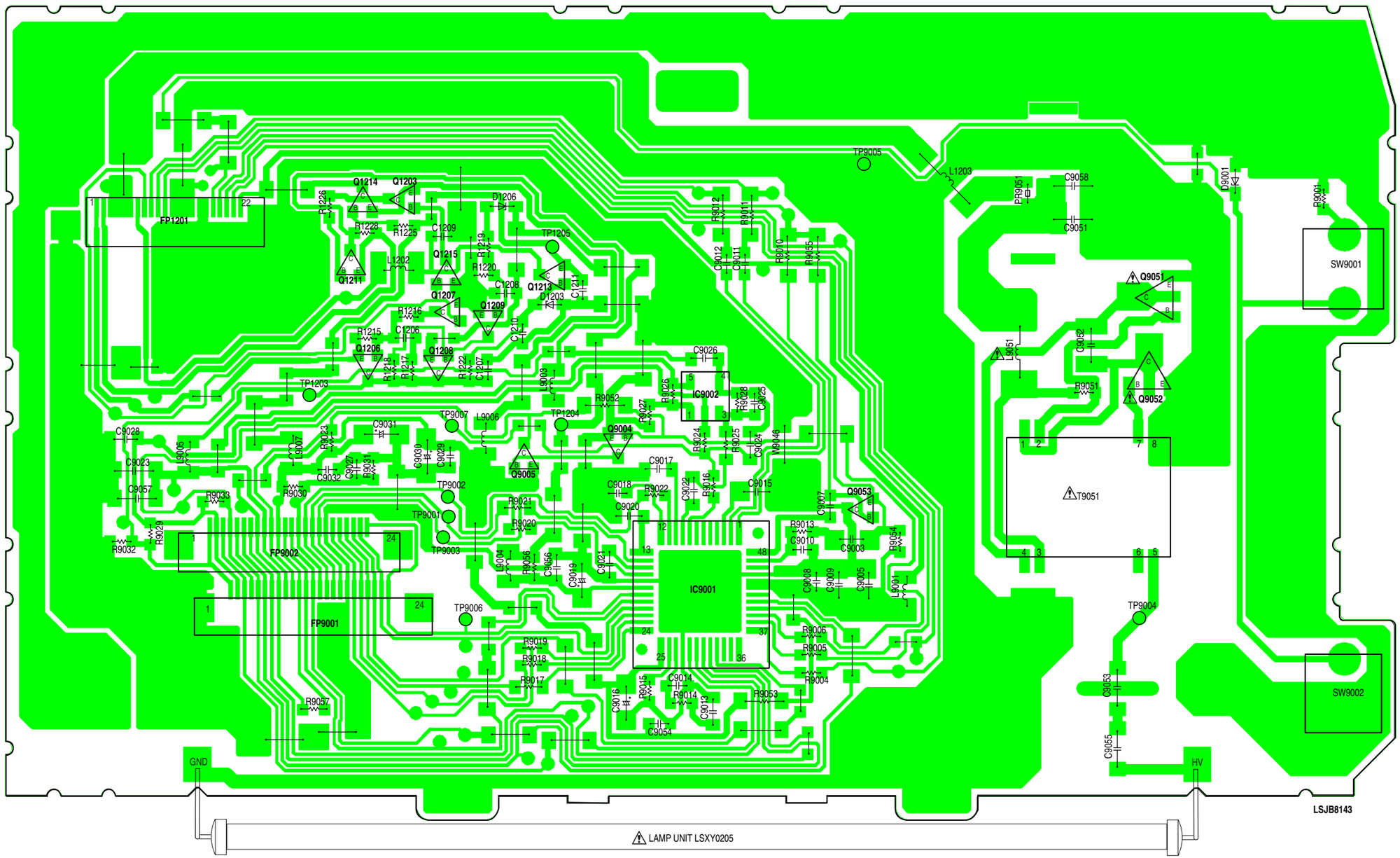

MECHANISM FPC UNIT

NOTE:
MECHANISM FPC UNIT IS NOT SERVICEABLE AND IS SUPPLIED AS A UNIT ONLY FOR REPLACEMENT.

NOTE:
FOR SCHEMATIC DIAGRAM AND CIRCUIT BOARD LAYOUT NOTES, REFER TO BEGINNING OF SCHEMATIC SECTION.

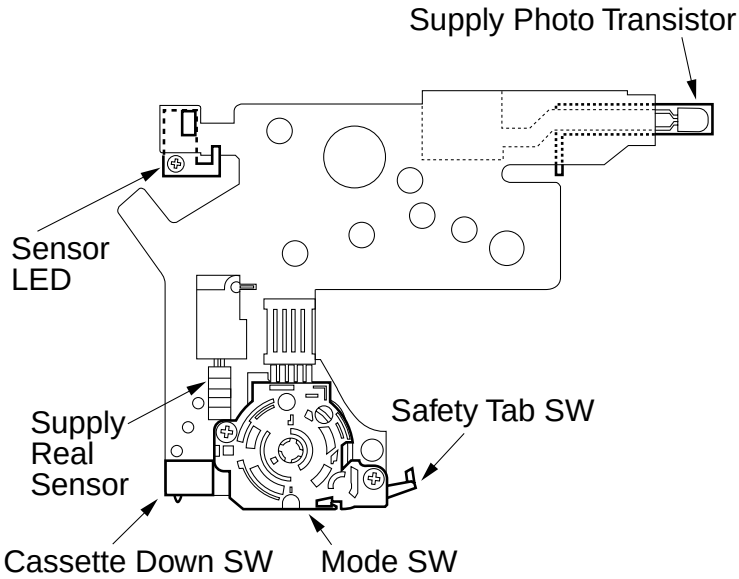

MAIN PARTS PORTION

STEP No.	Ref. No.	PART	Section No.	REMOVE	NOTE
1	-	Cassette Cover and LCD Ass'y	1	2(L-1), 2(L-2), FP9101	1
2	17	EVR Cover	1	586	-
3	-	Side Case L Ass'y	1	4533, 586, 2604, P3 **(Color EVF)**, P4 **(Monochrome EVF)**, FP11, FP13	2
4	184	Sensor Shield Case	1	504, 2(L-3)	-
5	-	Lens Ass'y	1	2586, FP8, FP9	3
6	E10	Main C.B.A.	1	2421, 473, FP1, FP2, FP4, FP6, FP7, FP10, FP12	4
7	50	VCR Mechanism Chassis Ass'y	1	2473, 533	5
8	-	Side Case R Ass'y	1	-----	-

A B C D E F

How to read chart shown above:

A: Order of Procedure steps.
When reassembling, perform steps (s) in reverse order.
B: Ref No.
C: Part to be removed or installed.
D: Section No.
E: Identification of part to be removed, unhooked, unlocked, released, unplugged, unclamped, or unsoldered.
2 533= 2 Screws 533, 2(L-1) = 2 Locking Tabs (L-1)
F: Refer to "Notes in chart."

❶ MAIN PARTS SECTION

Note:

1. Parts with no Ref. No. in "EXPLODED VIEW" are not supplied. And some Ref. No. will be skipped. Be sure to make your orders of replacement parts according to the parts list.
2. The parts indicated by the dotted line ⬚ are for Ass'y only and are not supplied.

COMPARISON CHART OF MODELS & MARKS

MODEL	MARK
PV-L452	A
PV-L652	B

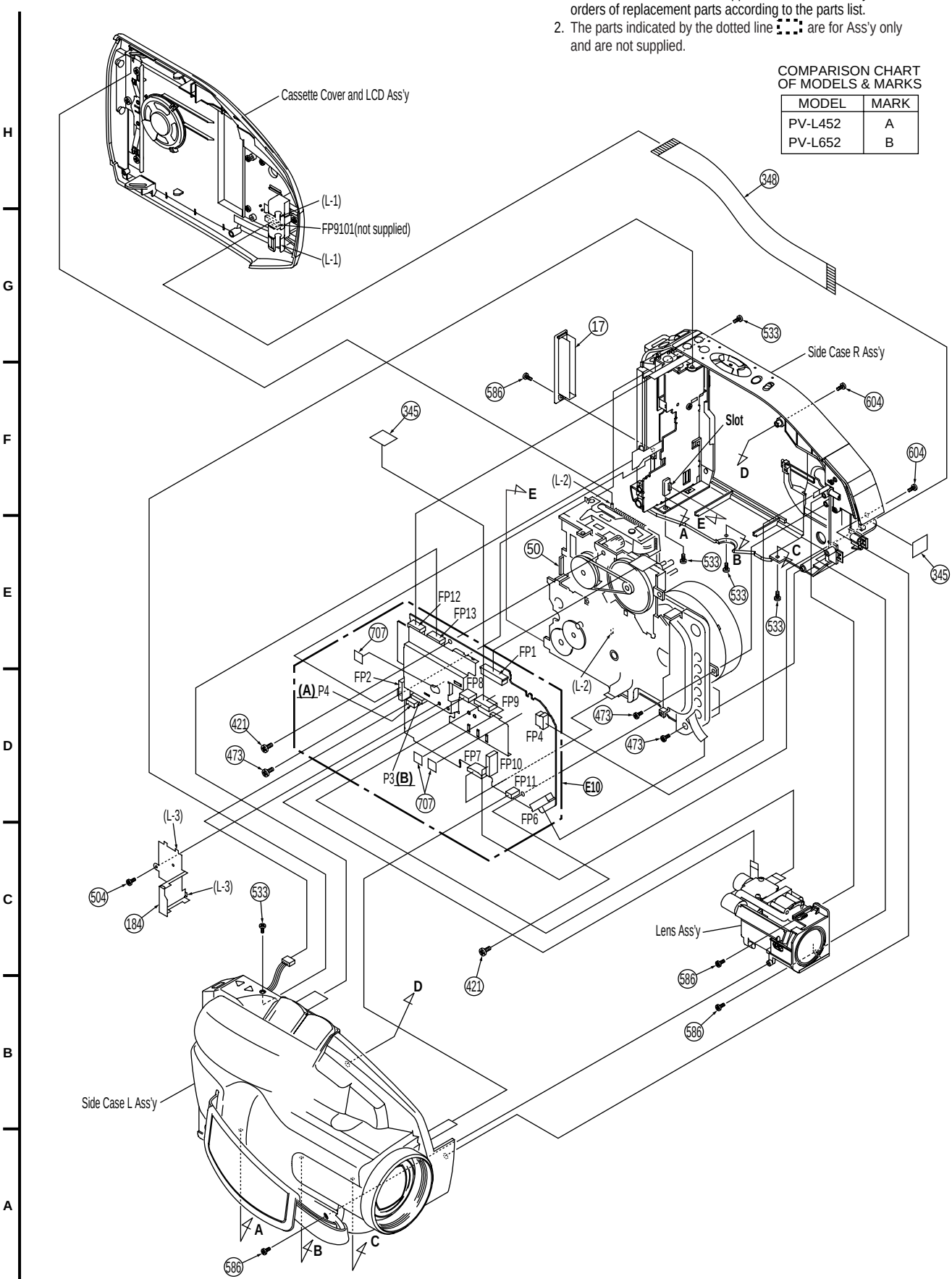

LCD PORTION

STEP No.	Ref. No.	PART	Section No.	REMOVE	NOTE
1	383	Shaft Cover	2	4604, 2(L-1)	-
2	-	LCD Case Ass'y	2	2586, 2(L-2), Unsolder	-
3	355	LCD Case A Unit	2	2469, 8(L-3)	-
4	366	LCD Shaft Unit	2	FP1201	-
5	335	LCD Case B	2	2586	6
6	E30	LCD C.B.A.	2	3(L-4), FP9001 **(2.5 inch LCD)**, FP9002 **(3 inch LCD)**, Unsolder	-
7	211	LCD Panel Unit	2	8(L-5)	-
8	212	Lead Light Panel Unit	2	-----	7
9	203	Lamp Unit	2	3(L-6), LCD Sheet Unit	8
A	B	C	D	E	F

How to read chart shown above:

A: Order of Procedure steps.
When reassembling, perform steps (s) in reverse order.
B: Ref No.
C: Part to be removed or installed.
D: Section No.
E: Identification of part to be removed, unhooked, unlocked, released, unplugged, unclamped, or unsoldered.
2 533= 2 Screws 533, 2(L-1) = 2 Locking Tabs (L-1)
F: Refer to "Notes in chart."

❷ CASSETTE COVER AND LCD SECTION

IMPORTANT SAFETY NOTICE:

COMPONENTS IDENTIFIED BY THE SIGN ⚠ HAVE SPECIAL CHARACTERISTICS IMPORTANT FOR SAFETY. WHEN REPLACING ANY OF THESE COMPONENTS, USE ONLY THE SPECIFIED PARTS.

COMPARISON CHART OF MODELS & MARKS

MODEL	MARK
PV-L452	A
PV-L652	B

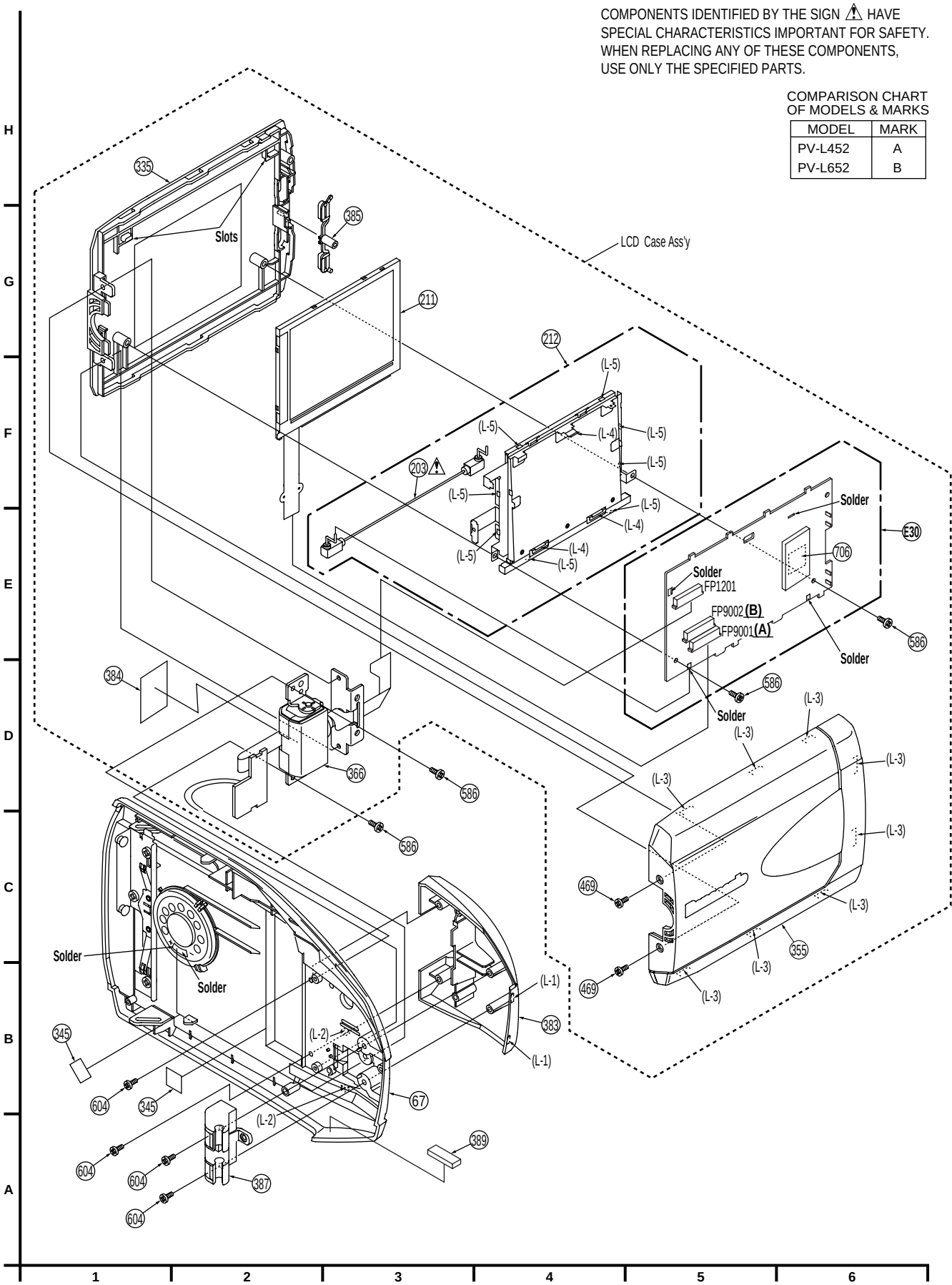

SIDE CASE L PORTION

STEP No.	Ref. No.	PART	Section No.	REMOVE	NOTE
1	61	Color EVF Unit /EVF Unit	3	2 586, 4 646, 645, 382	9
2	131	Side L FPC Unit	3	3 586, 2(L-1)	10
3	-	Microphone Ass'y	3	2 586	-
A	B	C	D	E	F

How to read chart shown above:

A: Order of Procedure steps.
When reassembling, perform steps (s) in reverse order.
B: Ref No.
C: Part to be removed or installed.
D: Section No.
E: Identification of part to be removed, unhooked, unlocked, released, unplugged, unclamped, or unsoldered.
2 533 = 2 Screws 533, 2(L-1) = 2 Locking Tabs (L-1)
F: Refer to "Notes in chart."

❸ SIDE CASE L SECTION

IMPORTANT SAFETY NOTICE:

COMPONENTS IDENTIFIED BY THE SIGN ⚠ HAVE SPECIAL CHARACTERISTICS IMPORTANT FOR SAFETY. WHEN REPLACING ANY OF THESE COMPONENTS, USE ONLY THE SPECIFIED PARTS.

COMPARISON CHART OF MODELS & MARKS

MODEL	MARK
PV-L452	A
PV-L652	B

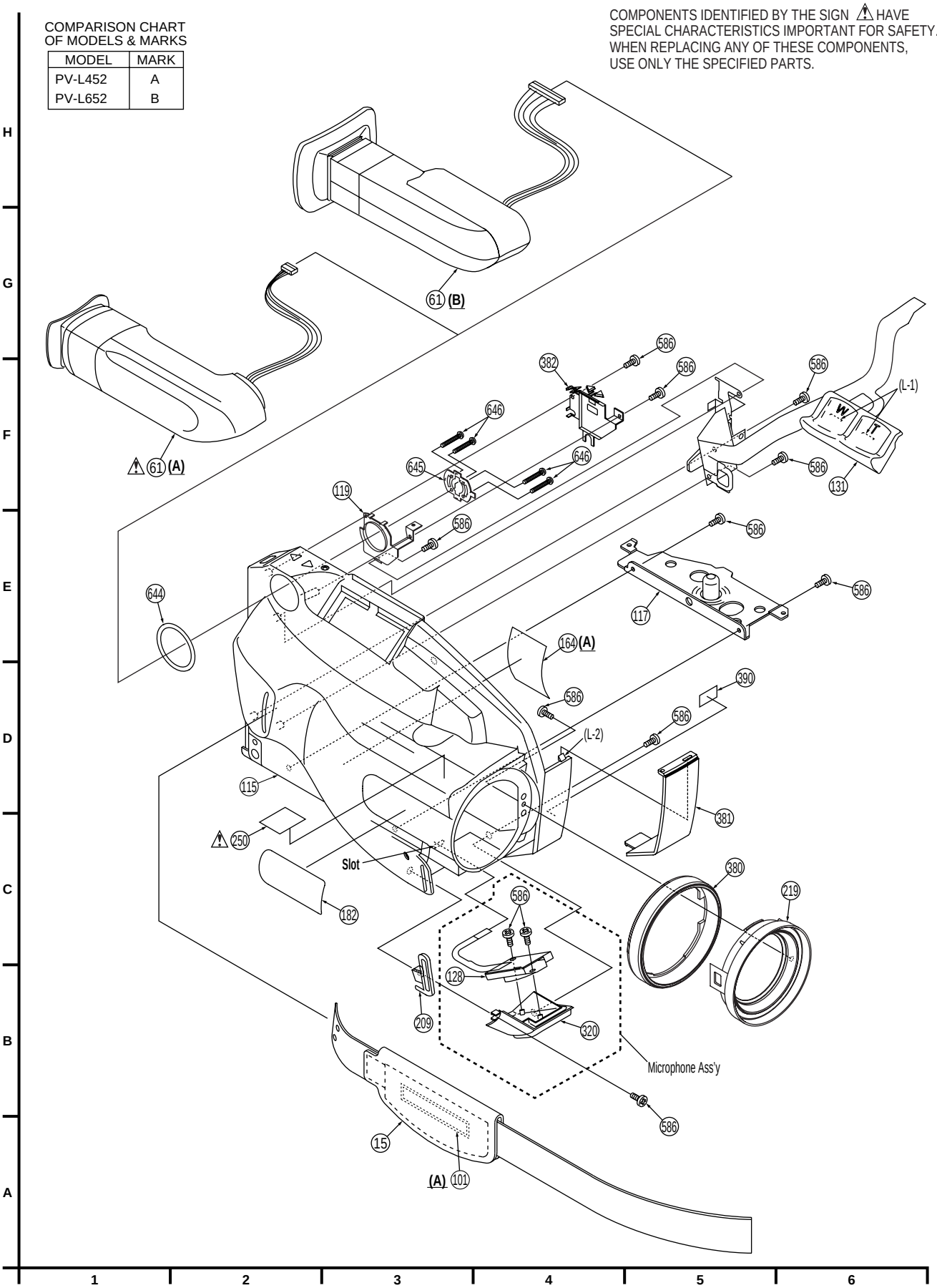

COLOR EVF PORTION

STEP No.	Ref. No.	PART	Section No.	REMOVE	NOTE
1	268	Eye Cap Unit	4	483, (L-1)	-
2	149	EVF Case B	4	2482, 4(L-2)	-
3	148	EVF Case A	4	-----	-
4	163	EVF ESD Plate	4	-----	-
5	343	Operation Plate	4	-----	17
6	118	EVF Plate	4	-----	-
7	346	P.C.B. Holder	4	4(L-3)	-
8	344	EVF Connector Unit	4	P901	-
9	E20	Color EVF C.B.A.	4	FP901	-
10	244	EVF Protect A	4	3(L-4)	-
11	251	EVF LCD Holder	4	-----	-
12	129	LCD Panel	4	-----	11
13	341	LED Lens	4	-----	-
14	249	LED Diffusion Plate	4	-----	-
15	236	Protect Plate	4	-----	-
A	B	C	D	E	F

How to read chart shown above:

A: Order of Procedure steps.
When reassembling, perform steps (s) in reverse order.
B: Ref No.
C: Part to be removed or installed.
D: Section No.
E: Identification of part to be removed, unhooked, unlocked, released, unplugged, unclamped, or unsoldered.
2 533= 2 Screws 533, 2(L-1) = 2 Locking Tabs (L-1)
F: Refer to "Notes in chart."

❹ COLOR EVF SECTION (Model: B)

COMPARISON CHART OF MODELS & MARKS

MODEL	MARK
PV-L452	A
PV-L652	B

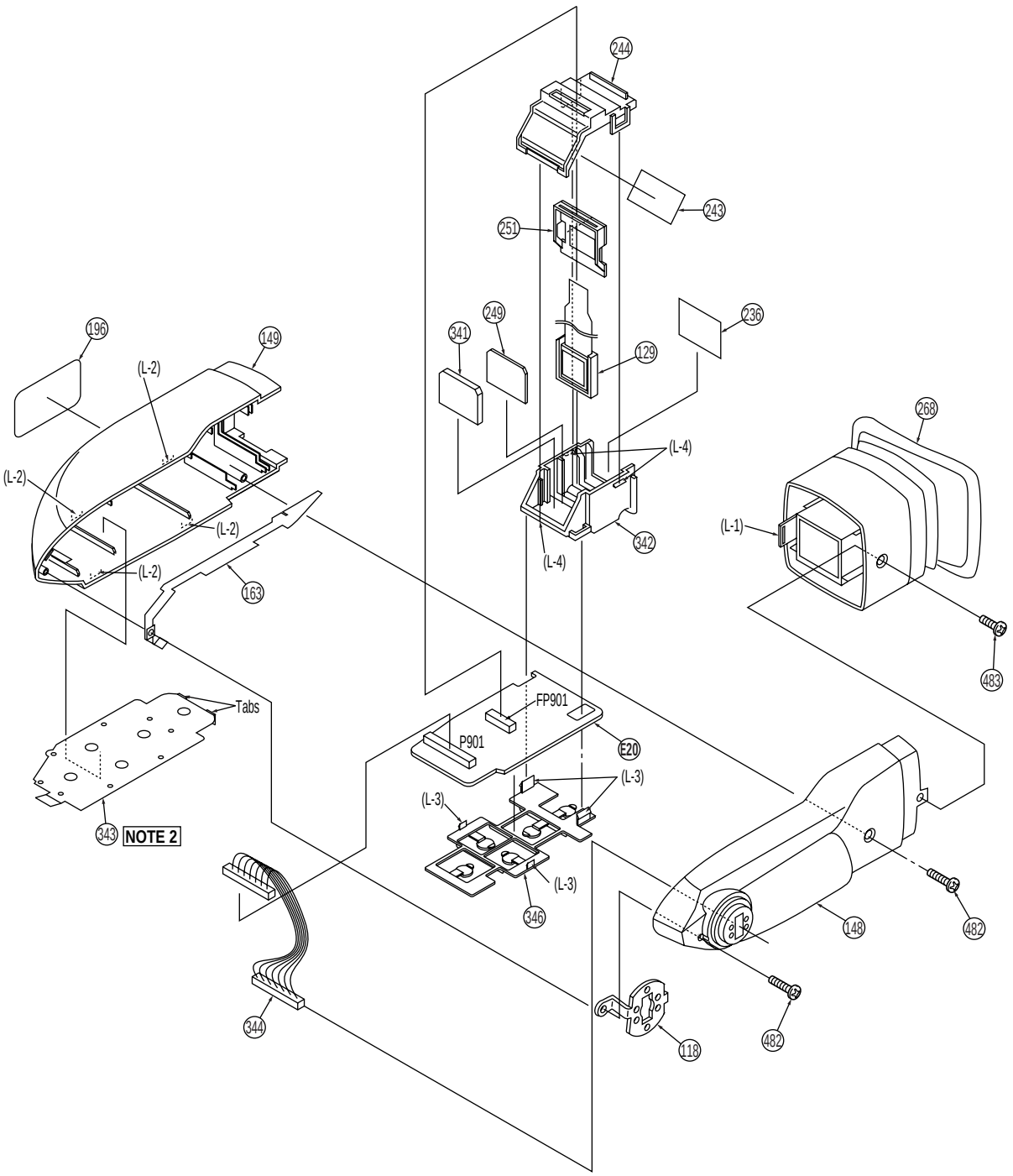

NOTE 2:
When replacing the Operation Plate, be sure to bend the Tabs straightly.
Refer to "Notes in chart 17" of CABINET SECTION in DISASSEMBLY/ASSEMBLY PROCEDURES.

CCD PORTION & LENS PORTION

STEP No.	Ref. No.	PART	Section No.	REMOVE	NOTE
1	E40	CCD C.B.A.	5	2 502	12
2	31	Filter Rubber	5	-----	12
3	16	Optical Filter	5	-----	12
4	241	IR Cut Filter	5	-----	12
A	B	C	D	E	F

How to read chart shown above:

A: Order of Procedure steps.
When reassembling, perform steps (s) in reverse order.
B: Ref No.
C: Part to be removed or installed.
D: Section No.
E: Identification of part to be removed, unhooked, unlocked, released, unplugged, unclamped, or unsoldered.
2 533= 2 Screws 533, 2(L-1) = 2 Locking Tabs (L-1)
F: Refer to "Notes in chart."

STEP No.	Ref. No.	PART	Section No.	REMOVE	NOTE
1	-	Lens Piece Ass'y	5	2 642	-
2	13	Focus Moter Unit	5	2 501, Unsolder	-
3	221	Zoom Moter Unit	5	2 501, Unsolder	13
A	B	C	D	E	F

How to read chart shown above:

A: Order of Procedure steps.
When reassembling, perform steps (s) in reverse order.
B: Ref No.
C: Part to be removed or installed.
D: Section No.
E: Identification of part to be removed, unhooked, unlocked, released, unplugged, unclamped, or unsoldered.
2 533= 2 Screws 533, 2(L-1) = 2 Locking Tabs (L-1)
F: Refer to "Notes in chart."

❺ LENS SECTION

LUBRICATION POINTS
When the marked parts are replaced, apply the recommended lubricants or adhesive for better maintenance of the unit.

Mark	Kind of Lubricant	Availability	Part Number
□□□	Grease	Available from Factory	LSUQ0002

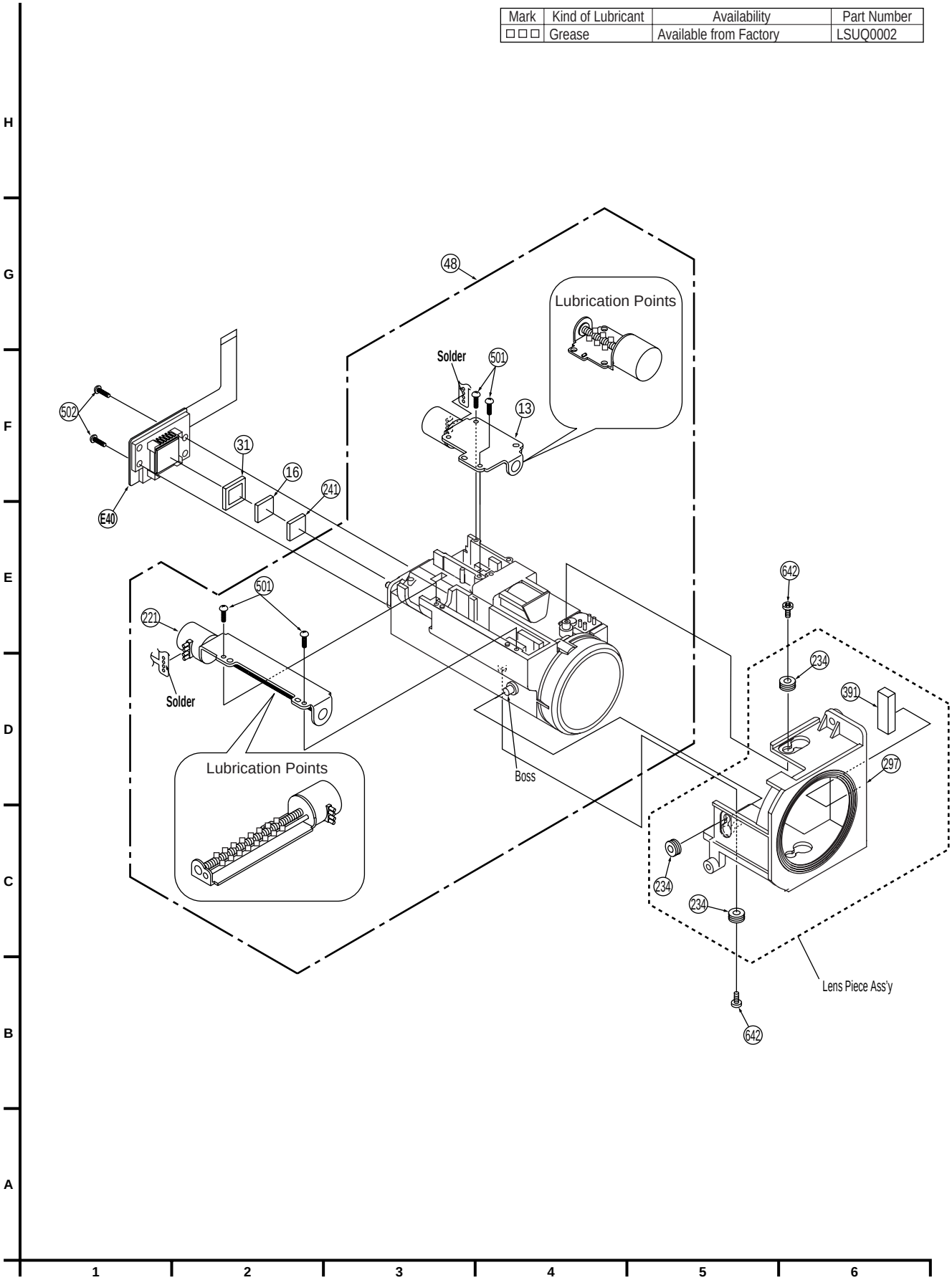

SIDE CASE R PORTION & LAMP PORTION

STEP No.	Ref. No.	PART	Section No.	REMOVE	NOTE
1	130	Top Operation Unit	6	2(L-1), (L-2)	14
2	30	Battery Catcher Unit	6	533, 586, 3(L-3), 29, Battery	15
A	B	C	D	E	F

How to read chart shown above:

A: Order of Procedure steps.
When reassembling, perform steps (s) in reverse order.
B: Ref No.
C: Part to be removed or installed.
D: Section No.
E: Identification of part to be removed, unhooked, unlocked, released, unplugged, unclamped, or unsoldered.
2 533= 2 Screws 533, 2(L-1) = 2 Locking Tabs (L-1)
F: Refer to "Notes in chart."

STEP No.	Ref. No.	PART	Section No.	REMOVE	NOTE
1	186	Light Protector	6	3(L-4)	-
2	340	Lamp	6	-----	16
A	B	C	D	E	F

How to read chart shown above:

A: Order of Procedure steps.
When reassembling, perform steps (s) in reverse order.
B: Ref No.
C: Part to be removed or installed.
D: Section No.
E: Identification of part to be removed, unhooked, unlocked, released, unplugged, unclamped, or unsoldered.
2 533= 2 Screws 533, 2(L-1) = 2 Locking Tabs (L-1)
F: Refer to "Notes in chart."

❻ SIDE CASE R SECTION

IMPORTANT SAFETY NOTICE:

COMPONENTS IDENTIFIED BY THE SIGN ⚠ HAVE SPECIAL CHARACTERISTICS IMPORTANT FOR SAFETY. WHEN REPLACING ANY OF THESE COMPONENTS, USE ONLY THE SPECIFIED PARTS.

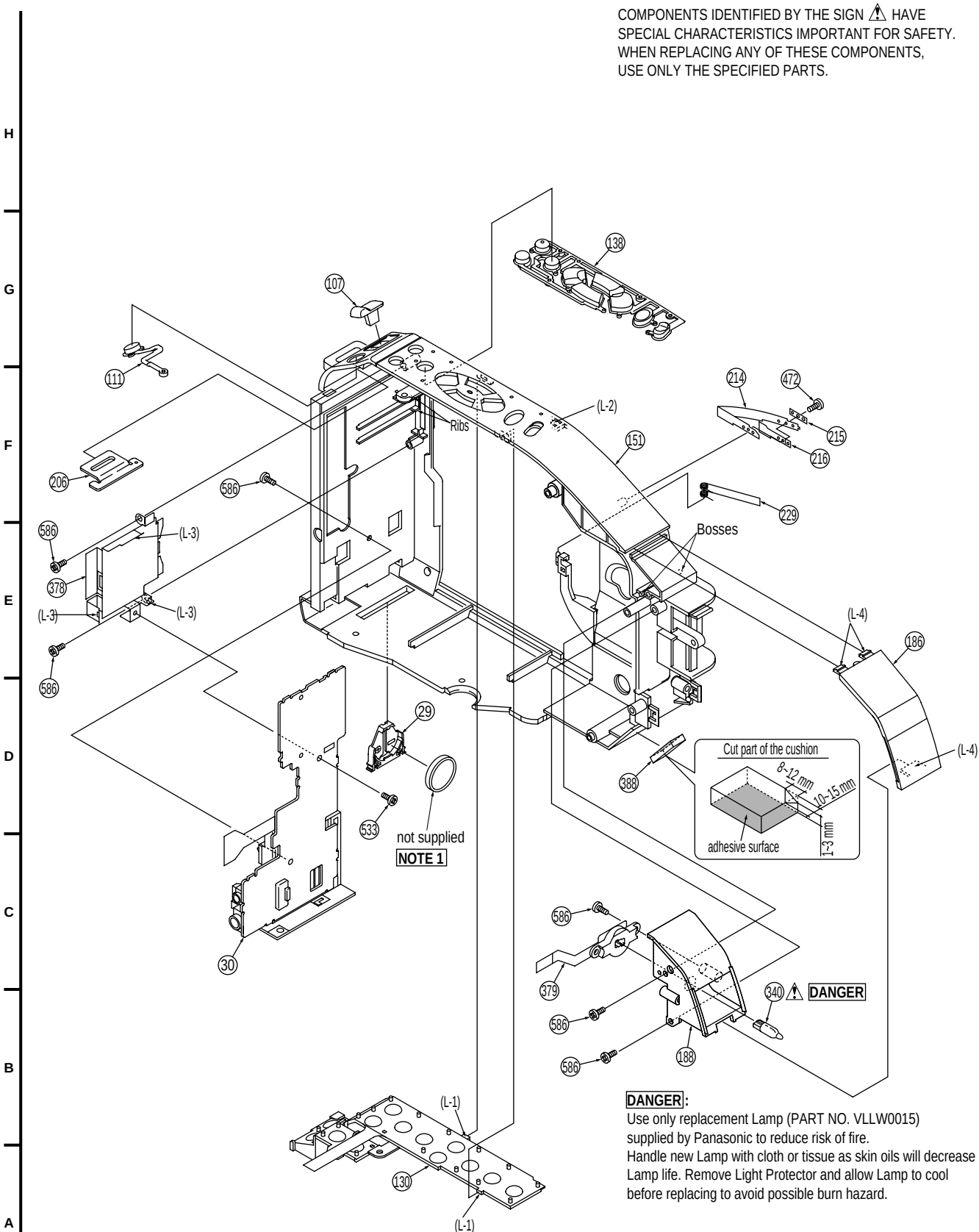

DANGER:
Use only replacement Lamp (PART NO. VLLW0015) supplied by Panasonic to reduce risk of fire.
Handle new Lamp with cloth or tissue as skin oils will decrease Lamp life. Remove Light Protector and allow Lamp to cool before replacing to avoid possible burn hazard.

NOTE 1:
Battey is not supplied as a replacemet part. Purchase CR2025 battery locally if required.

Notes in chart

1. **Removal of Cassette Cover and LCD Ass'y**
   To open the Cassette Cover, place the unit with the Cassette Cover facing upward. Then, slide the EJECT button with the power on, or remove the EVR Cover and slide the Lock Lever through TP Board slot.

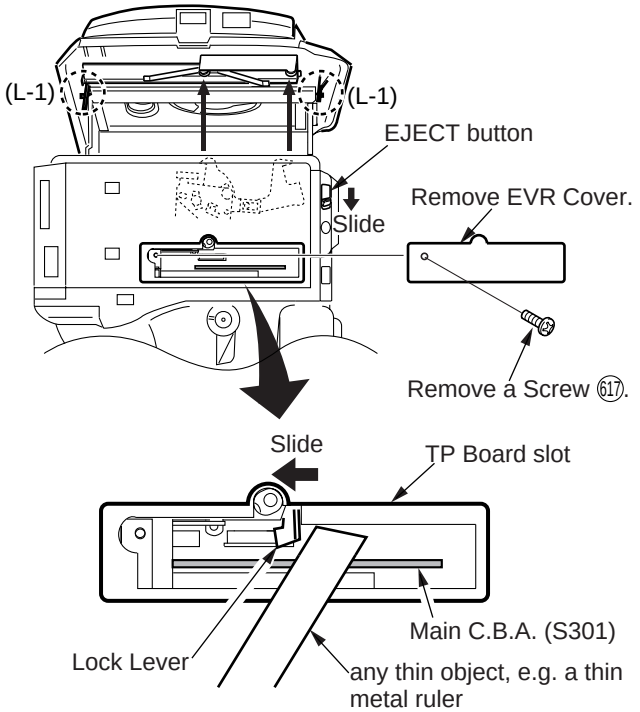

Fig. D2

2. **Removal of Side Case L Ass'y**
   When removing the Side Case L Ass'y, take care not to damage the F.P.C.s or Leads in the unit.

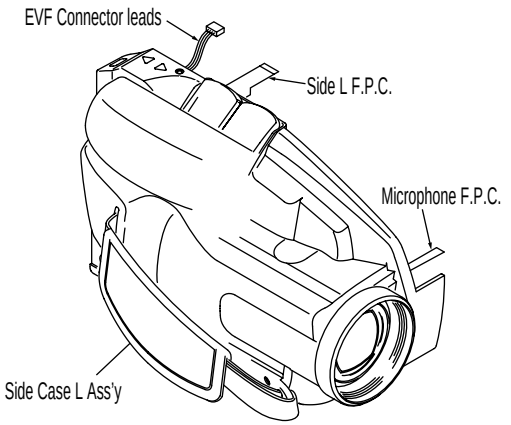

Fig. D3

3. **Installation of Lens Ass'y**
   Shape the Flexible Cable between Portion "a" of Lens Ass'y and Main C.B.A. as shown.

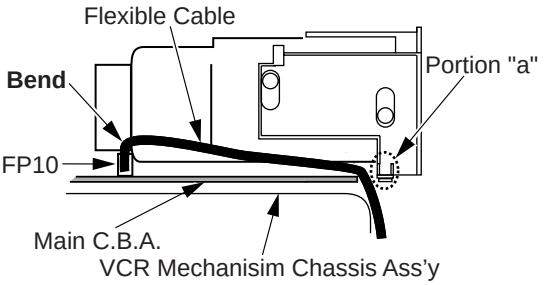

Fig. D4

4. **Installation of Main C.B.A.**
   1) Take care not to damage the Flexible Cables.
   2) Connect the Flexible Cables to the connectors on the Main C.B.A., verifying that the direction of the Flexible Cables is correct. Refer to "REMOVAL/INSTALLATION OF F.P.C. FROM NON ZIF (Zero Insertion Force) CONNECTOR."

5. **Installation of VCR Mechanism Chassis Ass'y**
   The VCR Mechanism Chassis Ass'y is supplied with a Lock Screw installed. Make sure to remove the Lock Screw from the Cassette Up Unit when replacing the VCR Mechanism Chassis Ass'y.

6. **Removal of LCD Case B**
   When removing the LCD Case B, pull the LCD Unit out of the slots while raising the lower portion of the LCD Unit.

7. **Installation of Lead Light Panel Unit**
   After replacing the Lead Light Panel Unit, confirm that the Terminal of the Lamp Unit is soldered correctly.

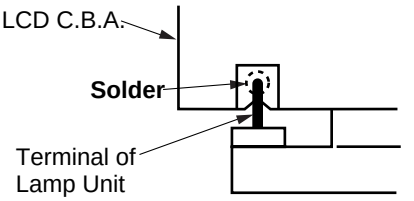

Fig. D5

8. **Installation of Lamp Unit**

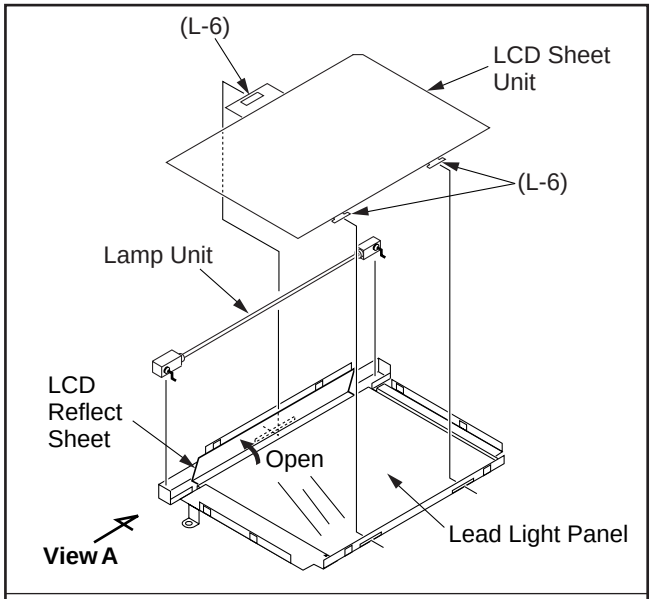

a. When installing the Lamp Unit, confirm that the Lamp Unit is positioned as shown below.
b. Use extreme caution when handling the Lead Light Panel and the LCD Sheet Unit to avoid damage, dust, and spots (especially fingerprints),etc.

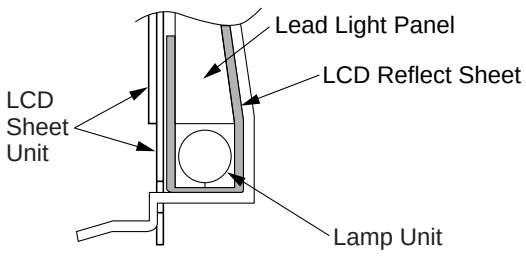

View A

Fig. D6

9. **Installation of Color EVF Unit/EVF Unit**
After installing, confirm that the EVF Connector Leads are set correctly on the Side L FPC Unit.

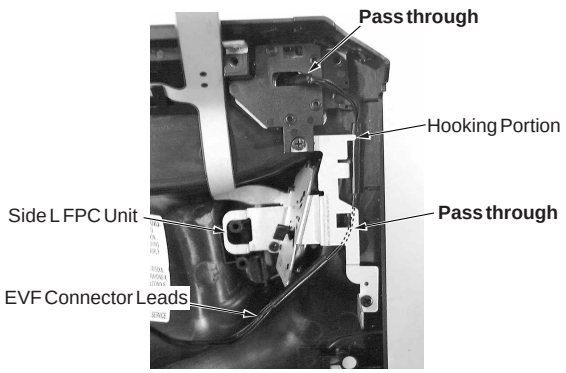

Fig. D7

10. **Removal of Zoom Switch on Side L FPC Unit**
1) Remove the 3 Screws (586).
2) Remove the Zoom Switch on Side L FPC Unit after releasing the 2 Locking Tabs (L-1).

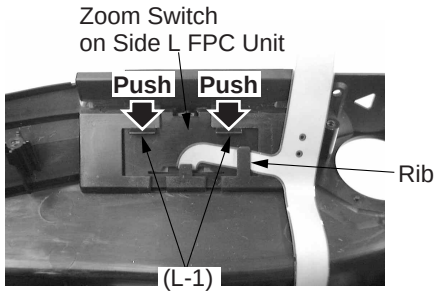

Fig. D8-1

Removal/Installation of Side L FPC Unit
CAUTION:
The Side L FPC Unit may be damaged if it is installed in order than Camera mode.
Be sure to set to Camera mode before installing.

When installing the Side L FPC Unit, be sure to set the VCR/Camera/Photo SW. to Camera mode:
(To do this, turn the VCR/Camera/Photo switch on the Side L FPC Unit in the direction of the arrow as far as possible (VCR mode). Then, turn the VCR/Camera/Photo switch through two clicks to Camera mode as shown.)

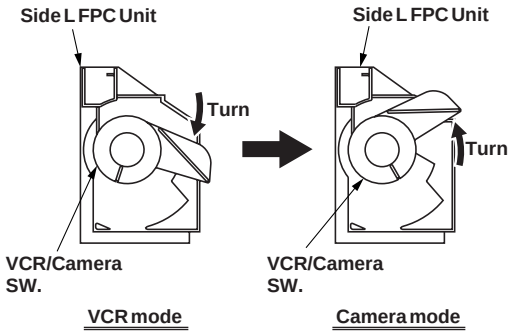

Fig. D8-2

11. **Removal/Installation of LCD Panel**
When disassembling or reassembling the Color EVF Unit, make sure that no dust gets into the Color EVF Unit.
1) Use extreme care when handling the LCD Panel to avoid damage, dust, and spots (especially fingerprints), etc.

12. **Removal of CCD C.B.A., Filter Rubber, Optical Filter, IR Cut Filter**
CAUTION:
1) When removing the CCD C.B.A., take care that the Optical Filter and the IR Cut Filter do not fall out.
2) Take extreme caution when removing the CCD C.B.A. because it is easily damaged by static electricity. Use a Wrist Strap while removing and installing.
3) Do not touch the CCD window surface.

Installation of CCD C.B.A., Filter Rubber, Optical Filter, IR Cut Filter
1) Install the IR Cut Filter in the Lens Unit correctly.
Note: Make sure no dust gets on the IR Cut Filter or in the Lens Unit. Clean the IR Cut Filter with lens cleaning paper dampened with lens cleaner if necessary.
2) Install the Optical Filter on the IR Cut Filter correctly.
Note: Make sure no dust gets on the Optical Filter or in the Lens Unit. Clean the Optical Filter with lens cleaning paper dampened with lens cleaner if necessary.
3) Install the Filter Rubber on the Optical Filter correctly as shown below.
Note: Make sure that no dust gets on the Filter Rubber.
4) Install the CCD C.B.A. in the Lens Unit. Then, secure the 2 Screws (502) while keeping the CCD C.B.A. pressed toward the upper right corner.
Note: Do not touch the Lens Surface. Clean the surface with lens cleaning paper dampened with lens cleaner if necessary.

13. **Installation of Zoom Motor Unit**
Install the Zoom Motor Unit so that the Shaft of the Zoom Motor Unit is set in the Holder. Then, tighten the 2 Screws (501).

14. **Installation of Top Operation Unit**
1) Install the Top Operation Unit to the Side Case R Unit while setting the Locking Tab (L-2).
2) Then, secure the 2 Locking Tabs (L-1).

15. **Installation of Battery Catcher Unit**
1) To remove the Battery Catcher Unit, first remove the Backup Cover (29) with the Battery.
2) Remove the 2 Screws (533, 586).
3) Release the 3 Locking Tabs (L-3). Then, slide the Battery Catcher Unit out by pushing Portions A and B as indicated by the arrow.

WARNING:
DANGER OF EXPLOSION IF BATTERY IS INCORRECTLY REPLACED. REPLACE ONLY WITH THE SAME OR EQUIVALENT TYPE.

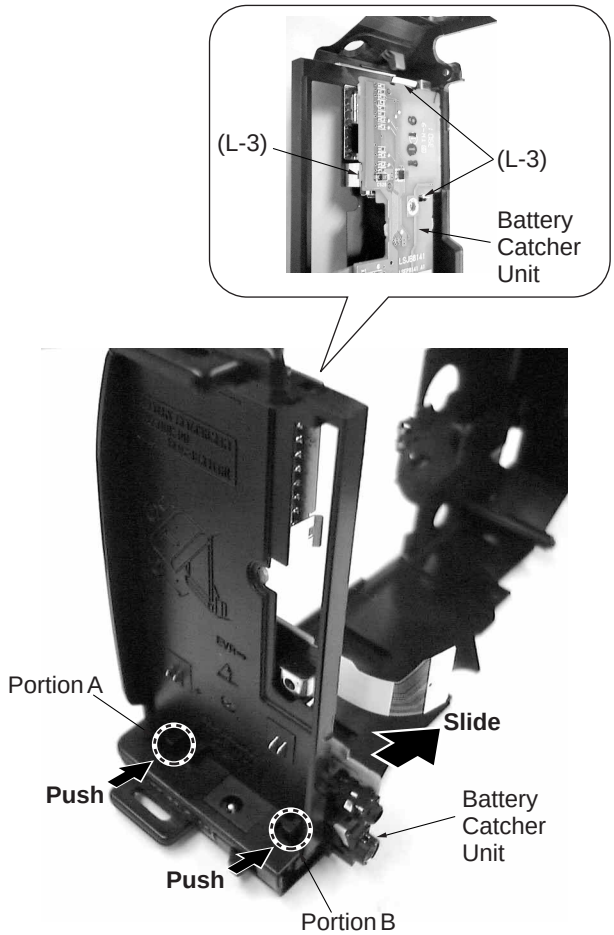

Fig. D9

16. **Replacement of Lamp**
When replacing the Lamp, refer to "HOW TO REPLACE THE LAMP" in "SERVICE NOTES."

DANGER:
Use only replacement Lamp (PART NO. VLLW0015) supplied by Panasonic to reduce risk of fire.
Handle new Lamp with cloth or tissue as skin oils will decrease Lamp life.
Remove Light Protector and allow Lamp to cool before replacing to avoid possible burn hazard.

17. **Installation of Operation Plate**
Before installing the Operation Plate, be sure to bend the Tabs straightly. Then, install in that condition.

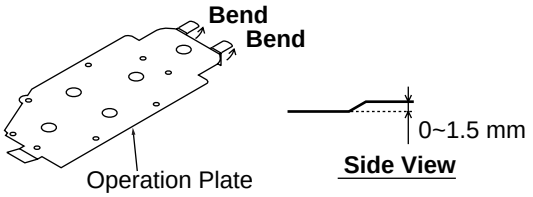

Fig. D10

Palmcorder®

MultiCam™ Camcorder

VHS C

Panasonic®

Camcorder

Operating Instructions

Models No. **PV-L452**
PV-L652

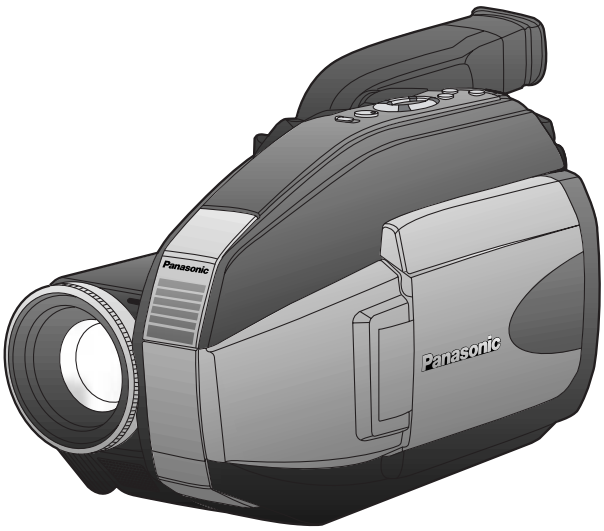

(PV-L652 shown)

MultiMediaCard™ SD™

Please read these instructions carefully before attempting to operate this product.
Please save this manual.
Guía para rápida consulta en español está incluida.

For assistance, please call : 1-800-211-PANA(7262) or send e-mail to : consumerproducts@panasonic.com

LSQT0529C

Getting Started
Basic Operation
Special Features
For Your Information

Things You Should Know

Thank you for choosing Panasonic!

You have purchased one of the most sophisticated and reliable products on the market today. Used properly, it will bring you years of enjoyment. Please take time to fill in the information to the right.
The serial number is on the tag located on the rear side of your Camcorder. Be sure to **retain this manual** as your convenient Camcorder information source.

Date of Purchase _____

Dealer Purchased From _____

Dealer Address _____

Dealer Phone No. _____

Model No. _____

Serial No. _____

Unpack your Camcorder

These accessories are provided in order to set up or use your Camcorder.

1 pc. AC Adaptor (PV-A19/PV-A20) with DC Power Cable (page 10)

1 pc. Audio/Video Cable (LSJA0390) (pages 21, 22)

1 pc. Battery Pack (PV-BP18) (pages 9, 10)

1 pc. Shoulder Strap (LSFC0012) (page 12)

1 pc. CR2025 Clock Battery (VSBW0004) (installed in Camcorder) (page 50)

1 pc. VHS PlayPak (PV-P1/VYMW0009) and one “AA” battery (page 21)

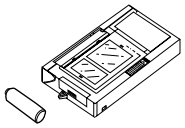

1 pc. Lens Cap (LSYK0817) with Lens Cap Strap (LSGQ0049) (page 12)

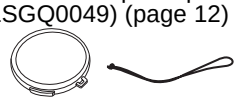

1 pc. Digital PhotoShot Disk for Windows 95/98/Me/2000 (LSFT0490) (page 41)

1 pc. Memory Card [8 MB] (LSFT0262) (page 34)

1 pc. PC Connection Cable (RS232C-2.5P) (LSJA0276) (page 41)

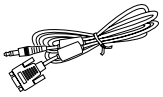

SD is a trademark of the SD Card Association.
MultiMediaCard is a registered trademark of the MultiMediaCard Association.
Microsoft and Windows are registered trademarks of Microsoft in the United States and other countries.
All product/brand names are trademarks or registered trademarks of the respective holders.

This operating instruction book is designed for use with models **PV-L452** and **PV-L652**. Illustrations in this manual show the **PV-L652**. Features may vary, so please read carefully.

Differences between models

Model Number	LCD Monitor	Digital Zoom maximum	Viewfinder	Security Tag
PV-L452	63.5 mm (2.5 inch) Liquid Crystal Display	750x	10.2 mm (0.4 inch) Electronic Viewfinder	YES
PV-L652	76.2 mm (3.0 inch) Liquid Crystal Display	800x	14 mm (0.55 inch) Liquid Crystal Color Electronic Viewfinder	NO

Things You Should Know

Safety Precautions

WARNING: TO PREVENT FIRE OR SHOCK HAZARD, DO NOT EXPOSE THIS EQUIPMENT TO RAIN OR MOISTURE.

Your Compact VHS Camcorder is designed to record and play back in Standard Play (SP) and Super Long Play (SLP) modes. You can also play a Compact VHS Camcorder recording on your VHS VCR using the supplied VHS PlayPak.

This Camcorder is equipped with the **HQ** System to provide excellent video pictures, and is compatible with standard VHS equipment.
It is recommended that only cassette tapes that have been tested and inspected for use in VCR machines with the VHSC and/or VHS mark be used.

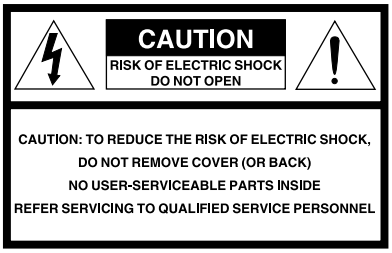

This symbol warns the user that uninsulated voltage within the unit may have sufficient magnitude to cause electric shock. Therefore, it is dangerous to make any kind of contact with any inside part of this unit.

This symbol alerts the user that important literature concerning the operation and maintenance of this unit has been included. Therefore, it should be read carefully in order to avoid any problems.

The above markings are located on the appliance's bottom cover.

Declaration of Conformity

Model Number	: **PV-L452/PV-L652**
Trade Name	: Panasonic
Responsibility Party	: Matsushita Electric Corporation of America
Address	: One Panasonic Way Secaucus New Jersey 07094
Telephone Number	: 1-800-211-PANA(7262)

This device complies with Part 15 of the FCC Rules. Operation is subject to the following two conditions: (1) This device may not cause harmful interference, and (2) this device must accept any interference received, including interference that may cause undesired operation.

FCC Warning : To assure continued FCC compliance, the user must use only provided shielded interfacing cable with ferrite cores when connecting to computer. Also, any unauthorized changes or modifications to this equipment would void the users authority to operate.

Note: This equipment has been tested and found to comply with Part 15 and part 18 of the FCC Rules. These limits are designed to provide reasonable protection against harmful interference when operated in a residential environment.
If this equipment does cause interference to radio or television reception, which can be determined by turning the equipment off and on, use the equipment in another location and/or utilize an electrical outlet different from that used by the receiver.
If necessary, consult the dealer or an experienced radio/TV technician for help. You may find the booklet, 'Something About Interference' available from FCC local regional offices helpful.

This product may cause interference to radio equipment and should not be installed near maritime safety communications equipment or other critical navigation or communication equipment operating between 0.45-30 MHz.

Important Safeguards

1. **Read Instructions** – All the safety and operating instructions should be read before the unit is operated.
2. **Retain Instructions** – The safety and operating instructions should be retained for future reference.
3. **Heed Warnings** – All warnings on the unit and in the operating instructions should be adhered to.
4. **Follow Instructions** – All operating and maintenance instructions should be followed.
5. **Cleaning** – Unplug this video unit from the wall outlet before cleaning. Do not use liquid or aerosol cleaners. Use a dry cloth for cleaning.
6. **Attachments** – Do not use attachments not recommended by the video product manufacturer as they may be hazardous.
7. **Water and Moisture** – Do not use this video unit near water – for example near a bath tub, wash bowl, kitchen sink, or laundry tub, in a wet basement, or near a swimming pool, and the like.
8. **Accessories** – Do not place this video unit on an unstable cart, stand, tripod, bracket, or table. The video unit may fall, causing serious injury to a child or adult, and serious damage to the unit. Use only with a cart, stand, tripod, bracket, or table recommended by the manufacturer, or sold with the video unit. Any mounting of the unit should follow the manufacturer's instructions and should use a mounting accessory recommended by the manufacturer. An appliance and cart combination should be moved with care. Quick stops, excessive force, and uneven surfaces may cause the appliance and cart combination to overturn.

9. **Ventilation** – Slots and openings in the cabinet are provided for ventilation and to ensure reliable operation of the video unit and to protect it from overheating. These openings must not be blocked or covered. Never place the video unit on a bed, sofa, rug, or other similar surface, or near or over a radiator or heat register. This video unit should not be placed in a built-in installation such as a bookcase or rack unless proper ventilation is provided or the manufacturer's instructions have been adhered to.
10. **Power Sources** – This video unit should be operated only from the type of power source indicated on the marking label. If you are not sure of the type of power supply to your home, consult your appliance dealer or local power company. For video units intended to be operated from battery power, or other sources, refer to the operating instructions.
11. **Grounding or Polarization** – This video unit may be equipped with either a polarized 2-wire AC (Alternating Current) line plug (a plug having one blade wider than the other) or 3-wire grounding type plug, a plug having a third (grounding) pin.

    The 2-wire polarized plug will fit into the power outlet only one way. This is a safety feature. If you are unable to insert the plug fully into the outlet, try reversing the plug. If the plug still fails to fit, contact your electrician to replace your obsolete outlet.
    Do not defeat the safety purpose of the polarized plug.

    The 3-wire grounding type plug will fit into a grounding type power outlet. This is a safety feature. If you are unable to insert the plug into the outlet, contact your electrician to replace your obsolete outlet. Do not defeat the safety purpose of the grounding type plug.
12. **Power-Cord Protection** – Power-supply cords should be routed so that they are not likely to be walked on or pinched by items placed upon or against them. Paying particular attention to cords of plugs, convenience receptacles, and the point where they exit from the unit.
13. **Outdoor Antenna Grounding** – If an outside antenna or cable system is connected to the video unit, be sure the antenna or cable system is grounded so as to provide some protection against voltage surges and built-up static charges. Part 1 of the Canadian Electrical Code, in USA Section 810 of the National Electrical Code, provides information with respect to proper grounding of the mast and supporting structure, grounding of the lead-in wire to an antenna discharge unit, size of grounding conductors, location of antenna discharge unit, connection to grounding electrodes, and requirements for the grounding electrode.

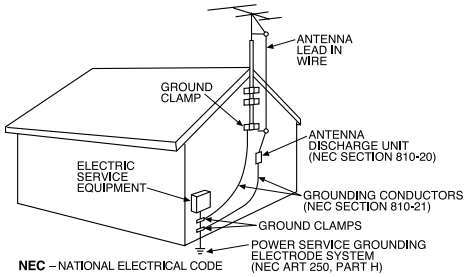

14. **Lightning** – For added protection of this video unit receiver during a lightning storm, or when it is left unattended and unused for long periods of time, unplug it from the wall outlet and disconnect the antenna or cable system. This will prevent damage to the video unit due to lightning and power-line surges.

Important Safeguards

15. **Power Lines** – An outside antenna system should not be located in the vicinity of overhead power lines or other electric light or power circuits, or where it can fall into such power lines or circuits. When installing an outside antenna system, extreme care should be taken to keep from touching such power lines or circuits as contact with them might be fatal.
16. **Overloading** – Do not overload wall outlets and extension cords as this can result in a risk of fire or electric shock.
17. **Objects and Liquids** – Never push objects of any kind into this video unit through openings as they may touch dangerous voltage points or short out parts that could result in a fire or electric shock. Never spill liquid of any kind onto the video unit.
18. **Servicing** – Do not attempt to service this video unit yourself as opening or removing covers may expose you to dangerous voltage or other hazards. Refer all servicing to qualified service personnel.
19. **Damage Requiring Service** – Unplug this video unit from the wall outlet and refer servicing to qualified service personnel under the following conditions:
    a. When the power-supply cord or plug is damaged.
    b. If any liquid has been spilled into, or objects have fallen onto, the video unit.
    c. If the video unit has been exposed to rain or water.
    d. If the video unit does not operate normally by following the operating instructions. Adjust only those controls that are covered by the operating instructions, as an improper adjustment of other controls may result in damage and will often require extensive work by a qualified technician to restore the video unit to its normal operation.
    e. If the video unit has been dropped or the cabinet has been damaged.
    f. When the video unit exhibits a distinct change in performance – this indicates a need for service.
20. **Replacement Parts** – When replacement parts are required, be sure the service technician has used replacement parts specified by the manufacturer or have the same characteristics as the original part. Unauthorized substitutions may result in fire, electric shock or other hazards.
21. **Safety Check** – Upon completion of any service or repairs to this video unit, ask the service technician to perform safety checks to determine that the video unit is in safe operating order.

Precautions

USE & LOCATION

- **TO AVOID SHOCK HAZARD ...** Your Camcorder and power supply should not be exposed to rain or moisture. Do not connect the power supply or operate your Camcorder if it gets wet. Your Camcorder has been designed for outdoor use, however it is not designed to sustain direct exposure to water, rain, sleet, snow, sand, dust, or a direct splashing from a pool or even a cup of coffee. This action could permanently damage the internal parts of your Camcorder. Do not attempt to disassemble this unit. There are no user serviceable parts inside. Unplug your Camcorder from the power supply before cleaning.
- **DO NOT AIM YOUR CAMCORDER AT THE SUN OR OTHER BRIGHT OBJECTS.**
- **DO NOT LEAVE THE CAMCORDER WITH THE EVF AIMED DIRECTLY AT THE SUN AS THIS MAY CAUSE DAMAGE TO THE INTERNAL PARTS OF THE EVF.**
- **DO NOT EXPOSE YOUR CAMCORDER TO EXTENDED HIGH TEMPERATURE ...** Such as, in direct sunlight, inside a closed car, next to a heater, etc... This action could permanently damage the internal parts of your Camcorder.
- **AVOID SUDDEN CHANGES IN TEMPERATURE ...** If the unit is suddenly moved from a cold place to a warm place, moisture may form on the tape and inside the unit.
- **DO NOT LEAVE YOUR CAMCORDER OR THE POWER SUPPLY TURNED ON WHEN NOT IN USE.**
- **STORAGE OF YOUR CAMCORDER ...** Store and handle your Camcorder in a manner that will not subject it to unnecessary movement (avoid shaking and striking). Your Camcorder contains a sensitive pick-up device which could be damaged by improper handling or storage.

CARE

- **TO CLEAN YOUR CAMCORDER ...** Do not use strong or abrasive detergents when cleaning your Camcorder body.
- **TO PROTECT THE LENS ...** Do not touch the surface of the lens with your hand. Use a commercial camcorder lens solution and lens paper when cleaning the lens. Improper cleaning can scratch the lens coating.
- **TO PROTECT THE FINISH OF YOUR CAMCORDER ...** Before handling your Camcorder, make sure your hands and face are free from any chemical products, such as suntan lotion, as it may damage the finish.

Table of Contents

Getting Started

Things You Should Know ..... 2~3
Important Safeguards ..... 4~5
Precautions 5
Self Demo Mode 7
Quick Operation Guide 8
Supplying Power (Battery Charge/Use/Refresh/Care, AC Adaptor, Car Battery Cord) ..... 9~10
Cassette Information 11
Before Using (Remove the Sensor tag, Using the Shoulder and Hand Straps, Lens Cap) 12
Using MENU Mode 13
Setting the Clock (Time Zone, Auto Daylight Saving Time) ..... 14~15
Built-in Auto Light (Using the Light, Rplacing the Bulb) 16

Basic Operation

Camera Recording (Basic, Stand-by, Programmed Recording) ..... 17~19
Playing Back Recordings
(Basic Playback, Visual Search, Still Picture, Tracking, TV/VCR Playback) ..... 20~21
Copying your Tapes (dubbing) 22

Special Features

Four-Speed Power Zoom 23
Backlight 23
MagicPix™ Images 24
Focus (Auto/Manual Focus) 25
High Speed Shutter (Auto/Manual Shutter) 26
Auto Fade 27
Color Digital Fade 28
Color Digital Filter 29
Digital Zoom 30
Digital Electronic Image Stabilization (E.I.S.) 31
Still/Strobe/Wide 32
MotionSensor 33
Digital Still Camera ..... 34~40
• **Memory Card Insertion/Removal** . 34
• **Recording** 35
• **Using the Light** 36
• **Playback** 36
• **Displayed Directry/Image Number** ... 37
• **Delete Specific Images** 38
• **Picture in Picture Wipe Title** 39
• **Digital Wipe Mode** 40
PC Connection ..... 41~44
Using a SD PCMCIA Adaptor (optional) 45

For Your Information

Viewfinder/LCD Monitor Indications ..... 46~48
Operation Notes (Cleaning EVF) 49
Notice 49
Replacing Clock Battery 50
Palmcorder Accessory System ..... 51~52
Palmcorder Accessory Order Form 53
Specifications 54
Before Requesting Service (Video Head Cleaning, Self Diagnostic System) ..... 55~56
Request for Service Notice 56
Limited Warranty 57
Servicenter List 58
Spanish Quick Use Guide/Guía Para Uso Rápido 59
Index 60

Self Demo Mode

Self Demo mode is on when the screen below appears. To turn it off, follow steps 1-4 below.

EVF or LCD Monitor

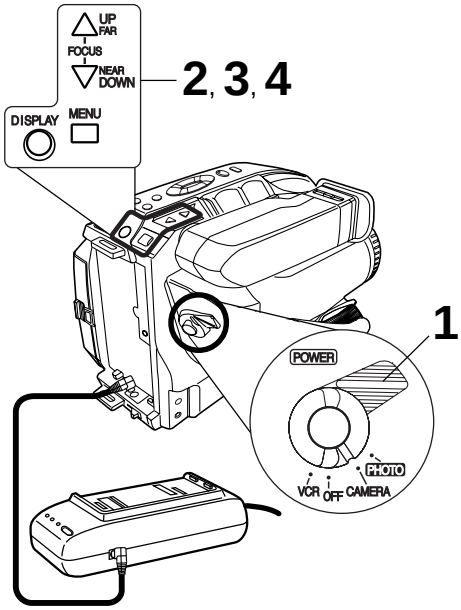

Before you begin...

- **Connect Camcorder to power source.**

1 **Set POWER to CAMERA.**

2 **Press MENU** for MENU mode.
Press UP or DOWN to select SELF DEMO.

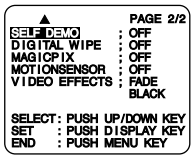

3 **Press DISPLAY** to select OFF.

4 **Press MENU** to exit.

Note:
- **Self Demo stops automatically if battery is attached** (page 9) **and cassette tape is inserted** (page 11).
- Inserting a tape alone (or attaching a partially charged battery) only temporarily stops Self Demo.
- Self Demo stops for 30 seconds when the Light is pressed.

To turn Self Demo back on:
- Set to SELF DEMO : ON in MENU screen.

Quick Operation Guide

Charging the Battery Pack

Charge Battery Pack fully before operation (page 9).

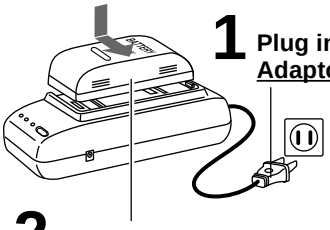

1 **Plug in AC Adaptor.**

2 **Insert Battery.** CHARGE Lamp flashes, then stays lit when charging is complete.

Insert Cassette

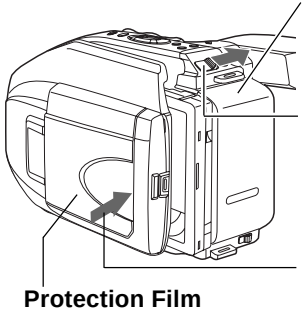

1 **Attach fully charged Battery** (page 9).

2 **Slide TAPE EJECT** to open door.

3 **Insert cassette** (page 11).

4 **Press here** to close door.

Protection Film

Note:

• Remove the Protection Film before use.

Camera Recording

When the LCD monitor is open, the EVF automatically turns OFF (Color EVF model only) (page 17).

1 **Press LCD-OPEN** to unlock the LCD monitor.
Swing it fully open and adjust the angle.

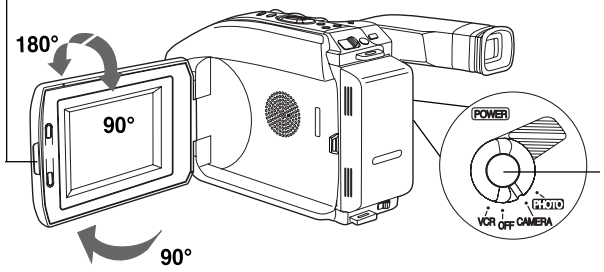

2 **Set POWER to CAMERA.**

3 **Press RECORD/PAUSE** to start recording.
Press RECORD/PAUSE again to pause recording.

Playback using the LCD Monitor

When the LCD monitor is open, the EVF automatically turns OFF (Color EVF model only) (page 20).

1 **Press LCD-OPEN** to unlock the LCD monitor.
Swing it fully open and adjust the angle (see above).

2 **Set POWER to VCR.**

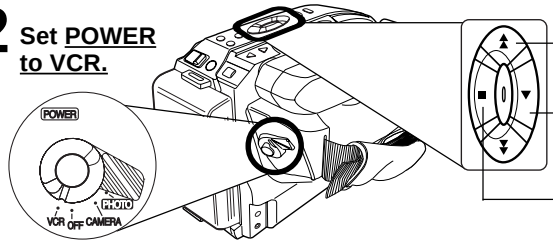

3 **Press REWIND/SEARCH** to rewind tape.

4 **Press PLAY** to start playback.

5 **Press STOP** to stop playback.

For assistance, please call : 1-800-211-PANA(7262) or send e-mail to : consumerproducts@panasonic.com

Charging the Battery Pack

Charge Battery Pack fully before use.

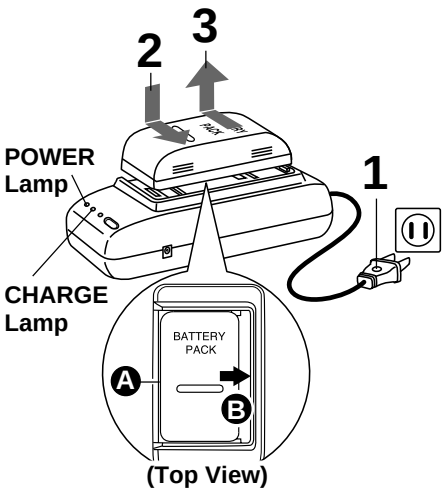

1 **Plug in AC Adaptor.**
POWER Lamp lights.

2 **Insert Battery.**
Ⓐ Align left side of Battery with left edge of AC Adaptor.
Ⓑ Press Battery down and slide in direction of arrow.

The CHARGE Lamp flashes, then stays lit when charging is complete.

3 **Remove Battery.**
Slide Battery to the left and lift off.

Note:
- Charging takes about 1 and 1/2 hours.
- While the DC Power Cable (supplied) is connected to the AC Adaptor, the Battery cannot be charged.
- After charging 5 times, use Battery Refresh feature as explained below.
- Battery life gradually decreases after repeated use and recharging. If operation time becomes very short even after a sufficient charge, discard Battery properly (page 10).

Using the Battery Pack

A fully charged Battery provides a maximum of about 2 hours of continuous use (LCD monitor off) or about 1.5 hours (LCD monitor on). Actual time may vary due to operating conditions. Using the Built-in Light decreases operating time.

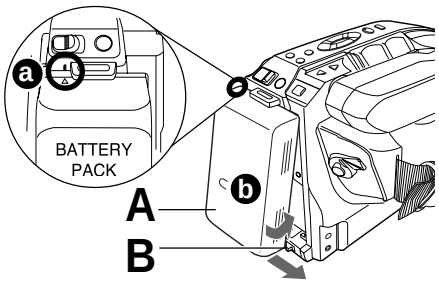

A **Attach Battery.**
ⓐ Insert top of Battery into top of mounting surface.
ⓑ Press and snap into place.

B **Remove Battery.**
Slide **BATTERY RELEASE** and remove Battery.

Battery Refresh

This feature completely discharges Battery before recharging begins.
Use after every 5 charges for optimum Battery performance.

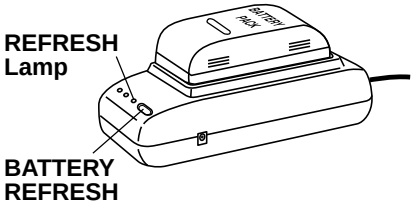

To use battery refresh, insert Battery on AC Adaptor (see steps 1~2 above), then press BATTERY REFRESH.

The REFRESH Lamp lights, then goes out when discharge is complete. Battery charging will then start automatically.

If BATTERY REFRESH is pressed by mistake, remove Battery from AC Adaptor and reinsert it for normal charging.

Note:
- Charging takes about 7 and 1/2 hours when Battery Refresh is used.
- Battery will not operate in extremely high temperatures.

Supplying Power

Battery Care

Caution:
- Charge only with specified charger.
- Battery can be charged within a temperature range of 10 °C (50 °F) and 35 °C (95 °F).
- Battery is normally warm after charging or just after use.
- Do not use an insufficiently charged or worn-out Battery.

Safety precautions:
- Do not get Battery near, or dispose of in, fire.
- Do not directly connect (short circuit) the positive (+) and negative (–) terminals.
- Never attempt to disassemble or reassemble Battery.

To avoid Battery damage:
- Do not drop or jar Battery.
- Use Battery with specified units only.
- If Battery is used in extremely high temperatures, a safety device will automatically prevent operation.

To prolong Battery life:
- While not in use, remove Battery from the Camcorder and AC Adaptor, and store in a cool, dark, dry place.
- Keep Battery terminals clean.

AC Adaptor

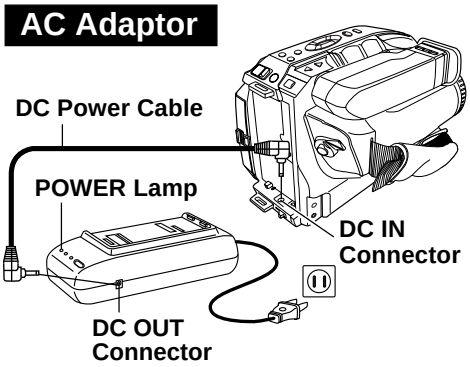

1 **Connect AC Adaptor DC OUT to Camcorder DC IN** with supplied DC Power Cable.

2 **Plug in AC Adaptor.**
POWER Lamp lights.

Note:
- While the DC Power Cable (supplied) is connected to the AC Adaptor, the Battery cannot be charged.
- When not in use, unplug AC Adaptor from AC outlet. (Adaptor uses 1.2 W of electricity while plugged in.)

CAUTION:
This unit will operate on 110/120/220/240 V AC 50/60 Hz. An AC plug adaptor may be required for voltages other than 120 V AC. Please contact either a local or foreign electrical parts distributor for assistance in selecting an alternate AC plug. We recommend using the accessory power plug adaptor (VJSS0070) in an area which has special AC outlets.

Car Battery Cord (Optional)

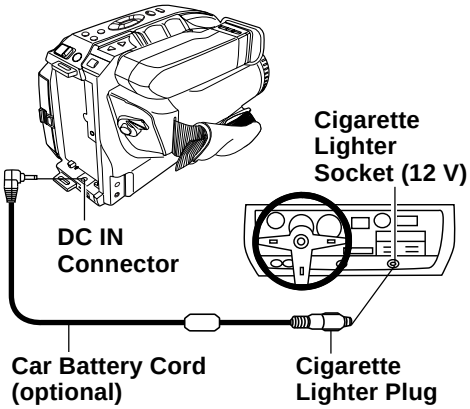

1 **Connect PV-C16 Car Battery Cord (optional) to Camcorder DC IN.**

2 **Ⓐ Start engine first.**
Ⓑ Plug Car Battery Cord into Cigarette lighter socket.
- If Car Battery cord fuse needs replacing, use exact current rating (in amps).

Note:
- This cord only works in vehicles equipped with **DC 12 V (negative ground)** battery. Check with your car/truck dealer. Use only specified car battery cord.
- To avoid blowing the car battery cord fuse, do step 2 in the proper order.
- Running vehicles must be well ventilated.
- When not in use, disconnect cigarette lighter plug.
- For personal safety the driver of the vehicle should not attempt to operate the camcorder while driving.

Cassette Information

Cassette Insertion/Removal

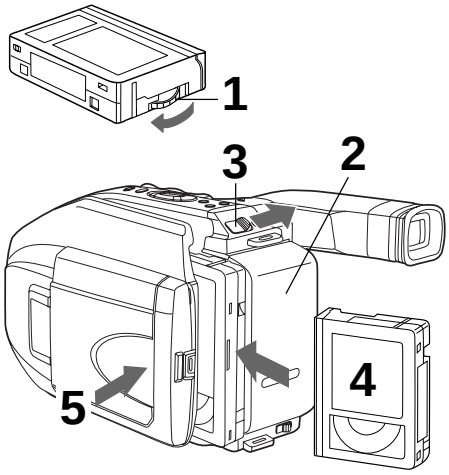

1 **Turn Tape Wheel** in direction of arrow until there is no slack.

2 **Attach Battery** (page 9).

3 **Slide TAPE EJECT** to open door.

4 **Insert cassette as shown.**

5 **Press here** to close door.

- **To remove the cassette, slide the TAPE EJECT switch.**

Record/Playback Time

Use tapes with the VHS C mark in this unit.

Tape Speed Selector Position	Cassette type		
	TC-20	TC-30	TC-40
SP (Standard Play)	20 minutes	30 minutes	40 minutes
SLP (Super Long Play)	1 hour	1 hour 30 minutes	2 hours

- SLP playback may contain more picture noise.

Erase Protection Tab

Protects tapes from being accidentally erased.

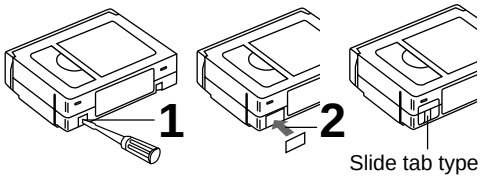

1 **To prevent accidental erasing,** break off tab with screwdriver. (Or, slide tab open.)

2 **To record again,** cover hole with adhesive tape. (Or, slide tab closed.)

Before Using

How to remove the Sensor tag (PV-L452 only)

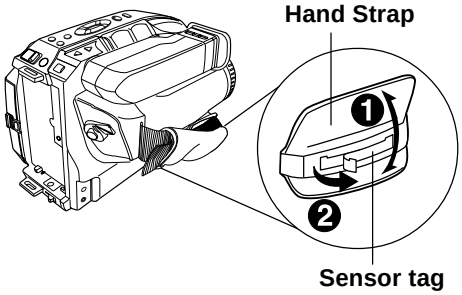

❶ **Open the Hand Strap** as illustrated at left.

❷ **Remove the Sensor tag.**
Then, replace the Hand Strap.

Attaching Shoulder Strap

Remove Battery Pack before doing steps.

1 **Undo strap ends** from buckles.

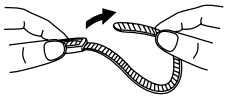

2 **Thread strap ends through Strap Rings on Camcorder.**

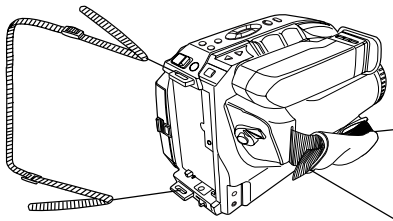

3 **Re-insert the strap ends into buckles.**

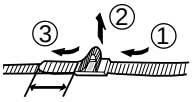

min. 25.4 mm (1 inch)

Adjust the Length of the Shoulder Strap

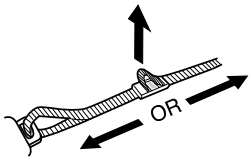

Pull a loop of strap from buckle, then pull strap tight to shorten or lengthen.

Hand Strap

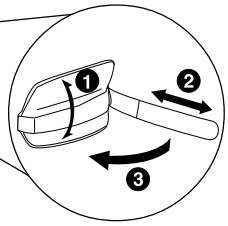

Adjust Hand Strap length to fit your hand as shown.

Lens Cap

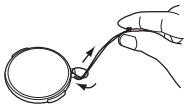

Attaching the Lens Cap Strap:
Thread the Strap through the Lens Cap attachment ring as illustrated at left.

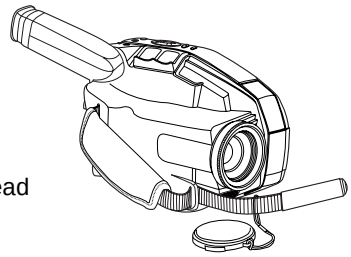

Attaching the Lens Cap Cord to the Hand Strap:
Remove the Hand Strap from the front clasp and thread the Strap through the loop in the Lens Cap Cord. Reattach the Hand Strap.

Using MENU Mode

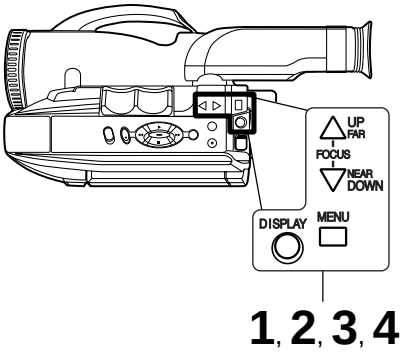

Before you begin...

- **Connect Camcorder to power source.**
- **Set POWER to CAMERA or VCR.**

1 **Press MENU** for MENU mode.
The CAMERA or VCR MENU screen (see below left) appears when Menu mode is entered.

2 **Press UP or DOWN to highlight** the desired menu item.

3 **Press DISPLAY** to set selection.

4 **Press MENU** to exit.

Note:
- The Menu mode is canceled if UP/DOWN, DISPLAY, or MENU are not pressed within 5 minutes when Self Demo mode is off.
- The Menu mode is canceled if UP/DOWN, DISPLAY, or MENU are not pressed within 30 seconds when Self Demo mode is on.

MENU Mode (CAMERA) Screen

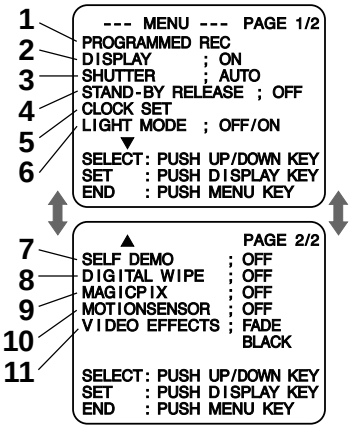

MENU Mode (VCR) Screen

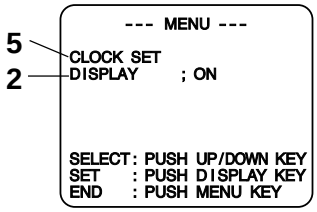

1 **PROGRAMMED REC** (page 19).
Camcorder starts and stops recording at a preset time.

2 **DISPLAY** (page 46).
ON : On-screen Display (OSD) screens are displayed.

3 **SHUTTER** (page 26).
Select desired shutter speed.

4 **STAND-BY RELEASE** (page 18).
ON : Enables quick resumption of recording from Stand-by mode.

5 **CLOCK SET** (pages 14, 15).
Select to set clock.

6 **LIGHT MODE** (page 16).
ON/OFF : Light can be set ON or OFF.
ON/OFF/AUTO : Light can be set ON, OFF, or AUTO.

7 **SELF DEMO** (page 7).
ON : SELF DEMO screen is displayed.

8 **DIGITAL WIPE** (pages 39, 40).
ON : Digital wipe mode can be used.

9 **MAGICPIX** (page 24).
ON : Picture sensitivity is increased.

10 **MOTIONSENSOR** (page 33).
ON : Enables MotionSensor recording.

11 **VIDEO EFFECTS** (pages 27~29).
AUTO FADE : BLACK or WHITE
DIGITAL FADE : TYPE → 7 types
COLOR → 8 colors
DIGITAL FILTER : COLOR → 5 colors

Setting the Clock

Set the following items in order: Time Zone, Daylight Saving Time, Date, and Time.

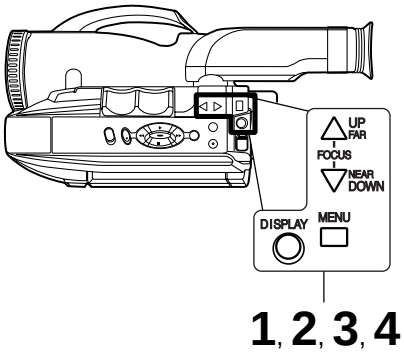

Before you begin...

- **Connect Camcorder to power source.**
- **Set POWER to CAMERA or VCR.**

1 **Press MENU** for MENU mode.
Press UP or DOWN to select **CLOCK SET**.

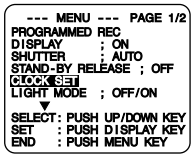

[CAMERA MODE]

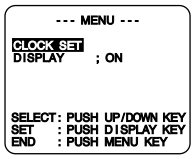

[VCR MODE]

2 **Press DISPLAY** for CLOCK SET menu.
Press UP or DOWN to select **TIME ZONE, DST, or DATE/TIME.**

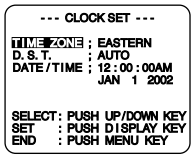

3 **Press DISPLAY** for menu of item selected in step 2.

To change the setting:

TIME ZONE ➔ Go to step **3a** on page 15.
D.S.T. ➔ Go to step **3b** on page 15.
DATE/TIME ➔ Go to step **3c** on page 15.

4 **Press MENU twice** to exit.

3a Setting the Time Zone

The Camcorder is preset to Eastern time.

[Time Zone chart]

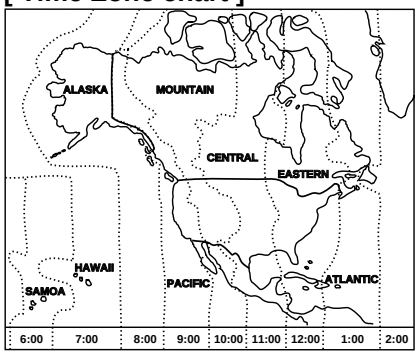

Press UP or DOWN to select local time zone.
Press DISPLAY to confirm entry.

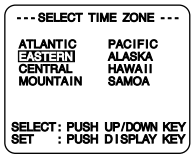

- When traveling, repeat this operation and select one of the 8 listed time zones to set the clock to local time.

Note :
- Clock may lose or gain up to 2 minutes per month.
- When traveling outside the listed time zones, set clock to local time manually.
- To adjust or set clock, see “Setting Date and Time” bottom of page.

3b Auto Daylight Saving Time

Clock will auto-adjust to daylight saving time (DST).

DST: AUTO

Spring (First Sunday in April) : ahead one hour.

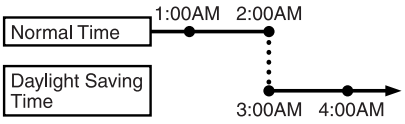

Autumn (Last Sunday in October) : back one hour.

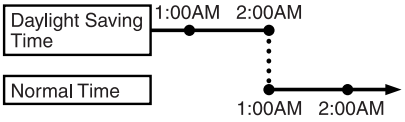

The Camcorder is preset to DST: AUTO. If DST is not observed in your area, set to OFF by doing the following.

Press UP or DOWN to select OFF or AUTO.
Press DISPLAY to confirm entry.

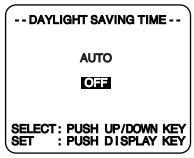

Note:
- Auto DST does not function if time zone is set to Hawaii or Samoa (see “Setting the Time Zone” above).

3c Setting Date and Time

Date and time including leap year are calculated up to DEC 31, 2099.

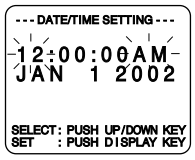

EXAMPLE :

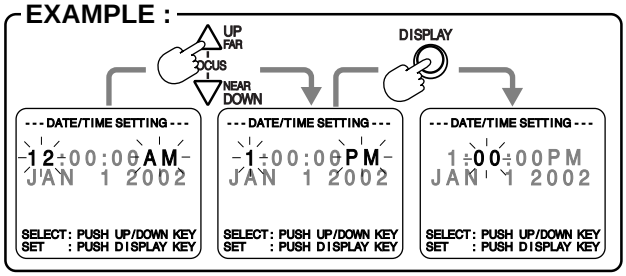

Press or hold down UP or DOWN to select hour, **then press DISPLAY** to fix.

Repeat for minute, month, day, and year.

Clock starts when year is entered and **DISPLAY** is pressed.

Built-in Auto Light

Using the Light

For recording in dim lighting.

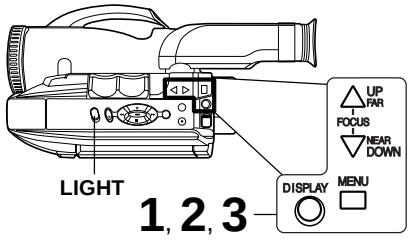

CAUTION:
Light becomes hot.
Never cover Light while on.

Note:
- Using Light reduces battery operating time.
- Provide proper ventilation when using Light extensively in a hot environment.
- Using Light when the Camcorder is powered by a car battery may shorten bulb life.
- Set Light to OFF when not in use.

Before you begin...
- **Connect Camcorder to power source.**
- **Set POWER to CAMERA.**

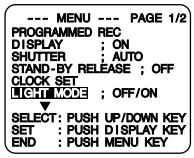

1 **Press MENU** for MENU mode. **Press UP or DOWN** to select **LIGHT MODE**.

2 **Press DISPLAY** to set OFF/ON or OFF/ON/AUTO. **Press MENU** to exit.

3 **Press LIGHT** repeatedly for Light ON, OFF, or AUTO.
- In AUTO, light turns itself on/off according to lighting conditions.

EVF or LCD Monitor

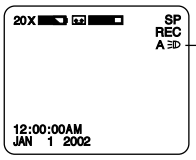

: Light is on.

A : Light mode is auto.

Replacing the Bulb

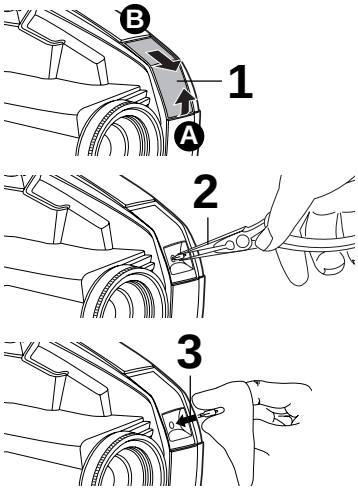

Before you begin...
- **Order Part No. VLLW0015 for replacement bulb.**
- **Set POWER to OFF.**

1 **Slightly raise portion A of lens cover to unhook, and slide portion B forward to remove.**

2 **Using Tweezers or needle-nose pliers, carefully remove bulb.**
- Take unit to service center if you need assistance.

3 **Replace bulb using a clean cloth or tissue. (Do not touch with fingers.)**

4 **Replace lens cover.**

Note:
- Handle bulb gently. Excessive force may cause bulb to crack.

DANGER:

Use only replacement bulb (PART NO. VLLW0015) supplied by Panasonic to reduce risk of fire.
Handle new bulb with cloth or tissue as skin oils will decrease bulb life.
Remove lens cover and allow bulb to cool before replacing to avoid possible burn hazard.

Recording via EVF or LCD Monitor

View recording scene on EVF (Electronic Viewer Finder) or LCD (Liquid Crystal Display) monitor.

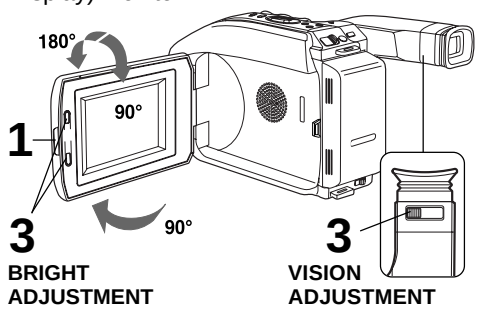

CAUTION :
Rotating partially open LCD monitor may block cassette door and damage Camcorder body.

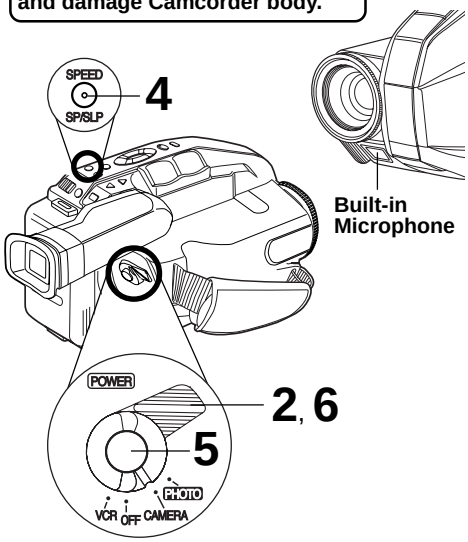

WARNING (PV-L652 only) :

- **Do not leave the camcorder with the EVF aimed directly at the sun. This may cause damage to the internal parts of the EVF.**

Note:

- When Camcorder is aimed at excessively bright objects, or bright lights, a vertical bar may appear in the picture. This is normal for the CCD pick-up. Try to avoid this when possible.
- Using LCD monitor reduces battery operation time. Return LCD monitor to locked position when not in use.

Before you begin...

- **Connect Camcorder to power source.**
- **Insert cassette with record tab (page 11).**

1 **Press LCD-OPEN** to unlock the LCD monitor. **Swing LCD monitor fully open and adjust viewing angle**.

- If you want to record using EVF, close and lock LCD monitor.

2 **Set POWER to CAMERA.**

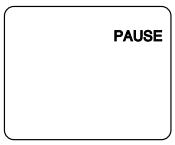

EVF or LCD Monitor
(Record/Pause mode)

- Be sure POWER is fully turned to CAMERA position.
- EVF or LCD monitor turns on/off by the POWER switch.
- EVF shuts off when LCD monitor is opened and turns back on when LCD is closed (Color EVF model only).
- Both EVF and LCD monitor turn on when LCD is at 180° (see above left). This allows both you and the subject to view the recording.

3 **LCD : Press BRIGHT ADJUSTMENT** to adjust LCD monitor brightness level.

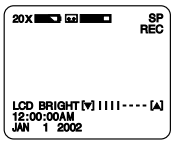

EVF : Look into EVF and adjust VISION ADJUSTMENT to your eyesight.

4 **Hold down TAPE SPEED** for about 1 second to change tape speed to SP/SLP (page 11).

5 **Press RECORD/PAUSE** to start or pause recording.

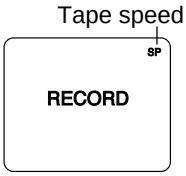

EVF or LCD Monitor
(Record mode)

6 **Set POWER to OFF** when finished.

- **To remove the cassette,** slide the TAPE EJECT switch (page 11).

Camera Recording

Before you begin...

- **Connect Camcorder to power source.**
- **Insert cassette with record tab (page 11).**

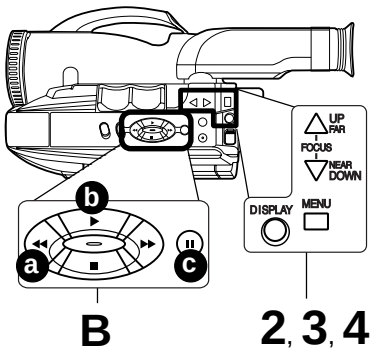

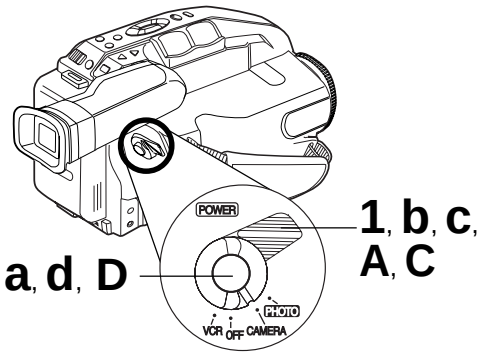

Stand-by Quick Release

If left in RECORD/PAUSE mode for 5 minutes, Camcorder switches to Stand-by mode to conserve battery. When set to ON, Stand-by Quick Release lets you resume recording by pressing RECORD/PAUSE two times. Stand-by Quick Release is set to OFF at the factory.

1 **Set POWER to CAMERA.**

2 **Press MENU** for MENU mode.
Press UP or DOWN to select STAND-BY RELEASE.

```
--- MENU ---   PAGE 1/2
PROGRAMMED REC
DISPLAY       : ON
SHUTTER       : AUTO
STAND-BY RELEASE ; OFF
CLOCK SET
LIGHT MODE    ; OFF/ON
SELECT: PUSH UP/DOWN KEY
SET   : PUSH DISPLAY KEY
END   : PUSH MENU KEY
```

3 **Press DISPLAY** to select ON/OFF.

ON : From Stand-by mode, press RECORD/PAUSE two times to resume recording.

OFF : From Stand-by mode, set POWER to OFF, then to CAMERA. Press RECORD/PAUSE to record.

4 **Press MENU** to exit.

Manual Easy Editing

For proper continuity when taping from Stop mode or after attaching a new Battery.

A **Set POWER to VCR.**

B ⓐ **Press REWIND/SEARCH** to rewind a few seconds of tape.
ⓑ **Press PLAY** to review recording.
ⓒ **Press STILL** where you want to continue recording.

C **Set POWER to CAMERA.**

D **Press RECORD/PAUSE** to resume recording.

Easy Edit Stand-by

For a smooth transition between scenes if recording is stopped, and then started within 24 hours.

a **Press RECORD/PAUSE to stop recording.**

b **Set POWER to OFF** and leave cassette in Camcorder.

c To resume recording, **set POWER to CAMERA.**

d **Press RECORD/PAUSE** to resume recording.

Note:
- Use Manual Easy Edit (left) if more than 24 hours before recording is resumed.

Programmed Recording

Set a recording start and stop time. Or, set a 5 or 10 second interval recording to be done each minute.

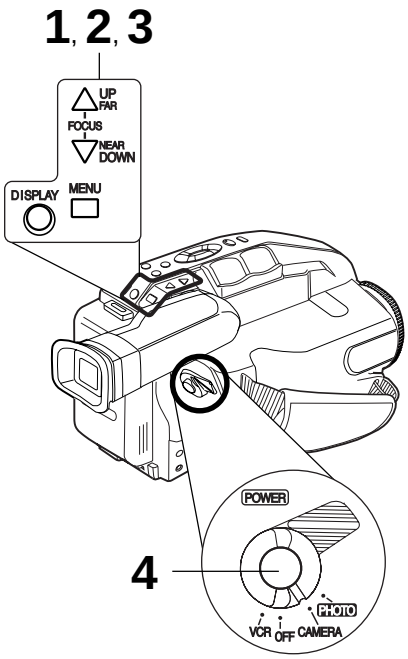

REC TIME :

→ 10MIN. → 20MIN. → 30MIN. → TO TAPE END → INTERVAL*1 5SEC/MIN. → INTERVAL*2 10SEC/MIN. →

*1 Record 5 seconds each minute.
*2 Record 10 seconds each minute.

Before you begin...

- **Connect Camcorder to power source. Use AC Adaptor for longer recordings.**
- **Insert cassette with record tab (page 11).**
- **Set POWER to CAMERA.**

1 **Press MENU** for MENU mode. **Press UP or DOWN** to select **PROGRAMMED REC**.

```
--- MENU --- PAGE 1/2
PROGRAMMED REC
DISPLAY        ; ON
SHUTTER        ; AUTO
STAND-BY RELEASE ; OFF
CLOCK SET
LIGHT MODE     ; OFF/ON
SELECT: PUSH UP/DOWN KEY
SET   : PUSH DISPLAY KEY
END   : PUSH MENU KEY
```

2 **Press DISPLAY.** (Current time is displayed.) **Each additional press of DISPLAY** increases start time by 30 minutes.

```
START    ; 10:20PM
REC TIME ; 10MIN.
SELECT: PUSH UP/DOWN KEY
SET   : PUSH DISPLAY KEY
START : PUSH RECORD KEY
CANCEL: PUSH MENU KEY
10:20:00PM
```

3 **Press DOWN** to select **REC TIME**. **Press DISPLAY** repeatedly to select one of the options shown at left.

```
START    ; 10:20PM
REC TIME ; 10MIN.
SELECT: PUSH UP/DOWN KEY
SET   : PUSH DISPLAY KEY
START : PUSH RECORD KEY
CANCEL: PUSH MENU KEY
10:20:00PM
```

To cancel the setup, **press MENU twice**.

4 **Press RECORD/PAUSE** to place Camcorder in stand-by mode.

```
STAND-BY
START    ; 10:20PM
REC TIME ; 10MIN.
10:20:00PM
JUN 1 2002
```

Recording will be done as scheduled.

Note:
- Start time may not be set over 24 hours from current time.
- Camcorder shuts off at tape end, or 12 hours after Interval Recording starts.
- To cancel, set POWER to OFF.

Playing Back Recordings

Before you begin...

- **Connect Camcorder to power source.**
- **Insert recorded tape.**

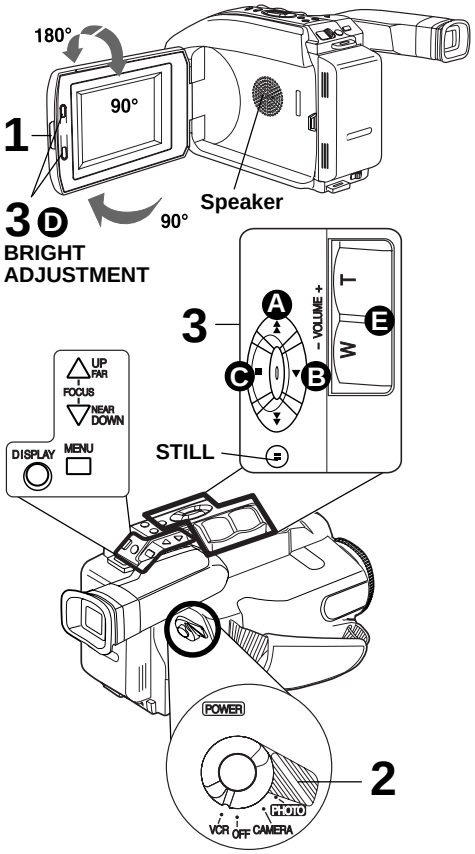

Tracking Control

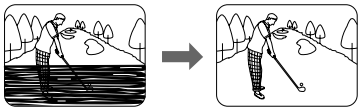

Auto Tracking

Continuously analyzes each recording for optimum picture quality.

Manual Tracking

Some recordings require manual adjustment to reduce noise.
Press UP or DOWN until Playback picture clears up.
Press DISPLAY to return to Auto Tracking.

Playback on EVF or LCD Monitor

1 **Press LCD-OPEN** and swing LCD monitor fully open.
- If you want to playback on EVF, close and lock LCD monitor.

2 **Set POWER to VCR.**
- If tape has no record tab, auto playback begins.
- EVF or LCD monitor turns on/off by the POWER switch.
- EVF shuts off when LCD monitor is opened and turns back on when LCD is closed (Color EVF model only).

3 **Playback function buttons.**

A **REW** : Rewind tape.
B **PLAY** : Play tape.
C **STOP** : Stop tape.
D **BRIGHT** : Adjust LCD monitor brightness.
E **VOLUME**: During playback, adjust volume of speaker.
Press "T" : Volume up (+).
Press "W" : Volume down (-).

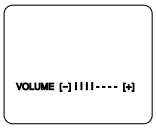

Note:
- Using LCD monitor reduces battery operating time. Return LCD monitor to locked position when not in use.

Special Effects

Quick Visual Search

Search Speed
- SP (Standard Play) : 3 times normal.
- SLP (Super Long Play) : 9 times normal.

During playback, press:
- **FF : fast forward search**
- **REW : rewind search**

Press again or press PLAY for normal play.

Still Picture

Press STILL to freeze picture.
Press again for normal play.
This feature works best in SLP mode (page 11).

Note:
- During search, horizontal noise bars will appear. Audio is muted.
- To protect video heads and tape, operating modes will revert as follows after 5 minutes:
  Still → Stand-by
  Stand-by → Power off (when Battery Pack is used).
- Tape auto-rewinds if played or fast forwarded to end.

For assistance, please call : 1-800-211-PANA(7262) or send e-mail to : consumerproducts@panasonic.com

Playing Back Recordings

TV Playback or Viewing

Connect Camcorder to a TV to view playback or recordings in progress.

Connections

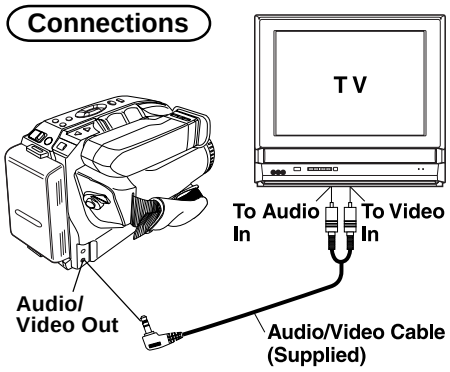

Before you begin...

- **Connect Camcorder to power source.**
- **Make all TV-Camcorder connections.**

1 **Set POWER to:**
VCR → view playback.
CAMERA → view picture as it is recorded.

2 **Turn TV ON and set to LINE INPUT.**
See TV owner's manual.

3 **Begin playback or recording.**

VCR Playback using PlayPak

Load Battery in PlayPak

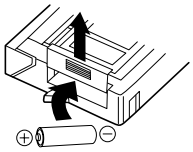

Remove Battery lid and insert AA battery.
- Do not reverse polarity.
- Replace battery when tape loading/unloading takes longer than usual.

Insert VHS-C Cassette in PlayPak

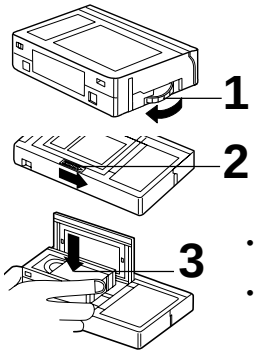

1 **Turn VHS-C cassette Tape Wheel in direction of arrow** to take up any slack.

2 **Slide RELEASE** to open cassette lid.

3 **Insert the VHS-C cassette** with the window up and on the left, **then snap lid shut.**

- Do not obstruct cassette reel while loading.
- Allow PlayPak Load Detector to fully retract before using in VHS VCR.

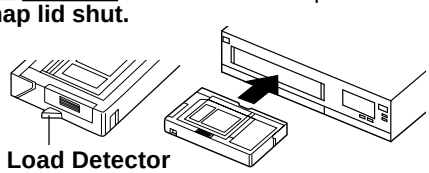

Remove VHS-C Cassette

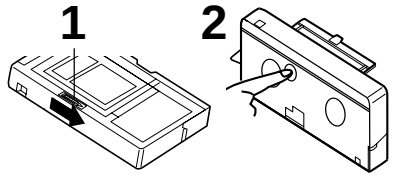

1 **Slide RELEASE** and wait for lid to open.

2 **Push cassette out through** hole in bottom of PlayPak with your finger.

Basic Operation

Copying your Tapes (dubbing)

Connections

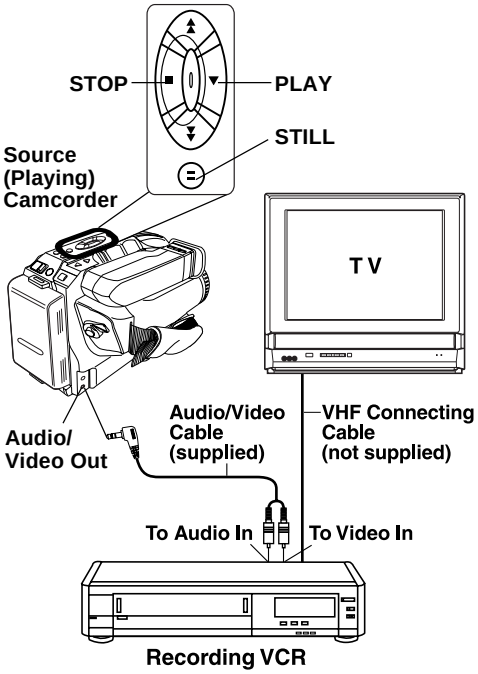

Before you begin...

- **Make Camcorder-VCR connections (see left).**
- **Turn both units on.**
- **Set VCR input signal to LINE. Please see VCR owner's manual.**
- **Set Camcorder POWER to VCR.**

1 **Insert a pre-recorded tape** into Camcorder and a blank tape with record tab into VCR.

2 **Press PLAY** on Camcorder, then **press STILL** at starting point.

3 **Press REC, then STILL/PAUSE on VCR.**

4 **Press STILL** on Camcorder and **STILL/ PAUSE** on VCR to start copying.

5 **Press STOP on both units to stop copying.**

Note:
- Camcorder will only playback tapes recorded in SP or SLP mode.
- Dubbing may reduce picture quality.

CAUTION:
Unauthorized exchanging and/or copying of copyrighted recordings may be copyright infringement.

Monitor with your TV

- Turn TV on and tune to VCR channel (CH3 or CH4).
- Set TV/VCR Selector on VCR to VCR.

Four-Speed Power Zoom

Zoom in (close up) and out (wide angle) in one of four speeds ranging from slow (16 seconds) to fast (2 seconds).

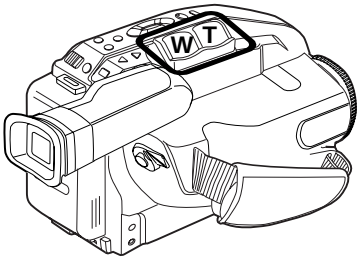

Before you begin...

- **Connect Camcorder to power source.**
- **Set POWER to CAMERA.**

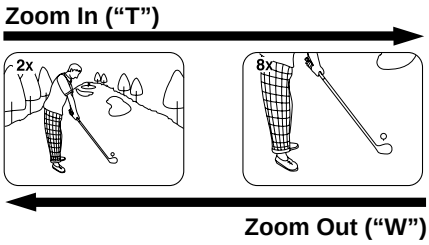

- **Zoom slowly:**
  Lightly press "T" (telephoto) or "W" (wide angle) POWER ZOOM button.
- **Zoom quickly:**
  Apply more pressure to the button.

Backlight

Use when subject is darker than surroundings, in shadowed area, or in front of the light source.

Before you begin...

- **Connect Camcorder to power source.**
- **Set POWER to CAMERA.**

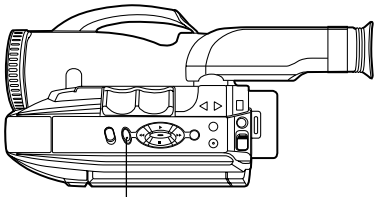

B.LIGHT

Press B.LIGHT while recording to select the level of backlight compensation.

In normal lighting, **press B.LIGHT** repeatedly until no indicator is displayed.

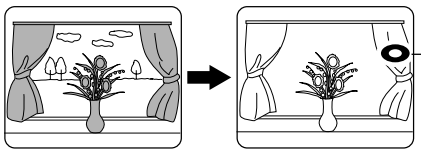

Press B.LIGHT.

EVF or LCD Monitor

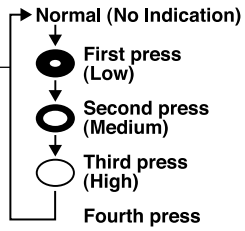

Special Features

MagicPix™ Images

Color recording of video onto a tape in low lighting.

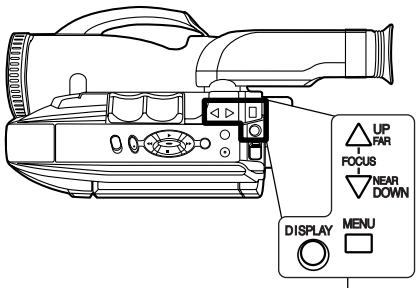

1, **2**, **3**

Before you begin...

- **Connect Camcorder to power source.**
- **Set POWER to CAMERA.**

1 **Press MENU** for MENU mode.
Press UP or DOWN to select MAGICPIX.

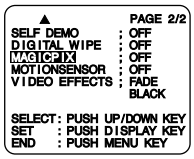

2 **Press DISPLAY** to select ON.

3 **Press MENU** to exit.

Note:
- If MagicPix is turned on, Shutter feature is disabled.
- MagicPix cannot be used with capture images on the Memory Card (page 35).
- Only Manual Focus is available.

Focus

Before you begin...

- **Connect Camcorder to power source.**
- **Set POWER to CAMERA.**

Auto Focus

Camcorder automatically focuses on subject even during zooming.

Auto Focus is on when “MF” is not displayed in EVF or LCD monitor.
Press M.FOCUS to remove “MF” in EVF or LCD monitor if necessary.

Manual Focus

Use Manual Focus (MF) when :
- recording through glass.
- lighting is poor.
- subject is far away with objects in foreground.
- subject has distinct horizontal lines.
- subject is not centered in EVF or LCD monitor.
- subject has a shiny surface.
- subject is slanted.
- subject is bright and flat, like a white wall.
- subject has fast motion, like a golf swing.

EVF or LCD Monitor

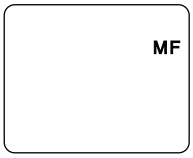

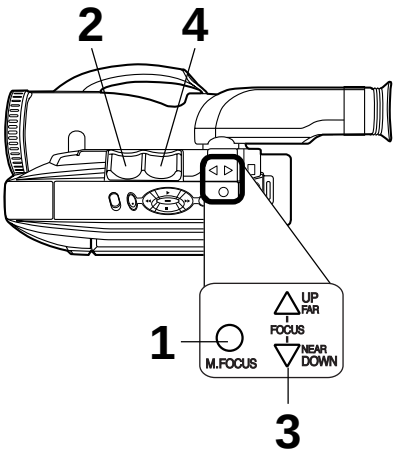

1 **Press M.FOCUS** so “MF” (Manual Focus) appears in EVF or LCD monitor.

2 **Hold down “T” (telephoto) on POWER ZOOM** to maximum zoom in.

3 **Press UP (FAR) or DOWN (NEAR)** until subject is in focus.
- Back away from subject if necessary.

4 **Hold down “W” (wide angle) on POWER ZOOM** as desired.

- **Refocus as needed** when aiming at new scenes.

Macro Focus (close-ups)

Auto Focus functions up to 12.7 mm (1/2 inch) from subject.

Hold down “W” on POWER ZOOM to maximum wide angle.
Bring Camcorder up close to the subject.

High Speed Shutter

Improves Still or Slow Motion playback picture of high speed subjects (e.g. a tennis stroke), when viewed on Camcorder or 3 or 4 head VCR.

Before you begin...

- **Connect Camcorder to power source.**
- **Insert cassette with record tab (page 11).**
- **Set POWER to CAMERA.**

Auto Shutter

In AUTO mode (no indication in EVF or LCD Monitor), shutter speed is auto-adjusted from 1/60 to 1/350 according to subject brightness.

- AUTO mode is selected each time POWER is set to CAMERA.

Manual Selection

The faster the shutter speed, the more light is needed for proper picture and color quality. High Speed Shutter indication flashes if light is inadequate. Provide additional light.

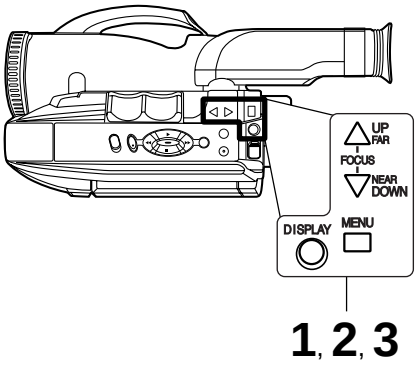

1 **Press MENU** for MENU mode.
Press UP or DOWN to select **SHUTTER**.

2 **Press DISPLAY repeatedly** to select shutter speed.

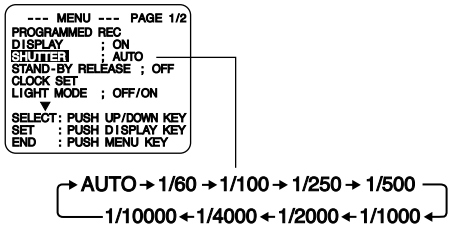

3 **Press MENU** to exit.

Note:

- Shutter speed cannot be set to 1/60 if Digital E.I.S. feature is set to ON.
- Provide additional halogen or tungsten light for use indoors or in poor light. Fluorescent light degrades picture.
- Auto Focus may not function properly if high speed shutter is used in inadequate light.
- Setting reverts to AUTO each time POWER is set to CAMERA.

Auto Fade

An interesting way to open and close scenes.

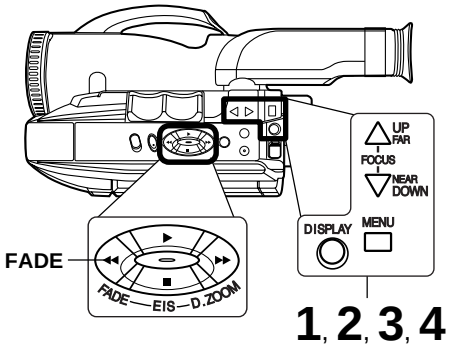

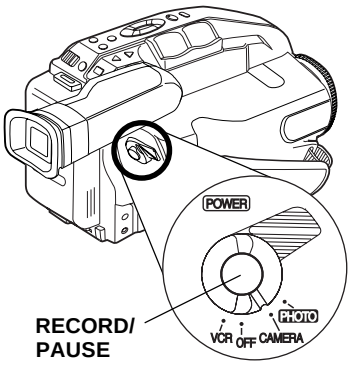

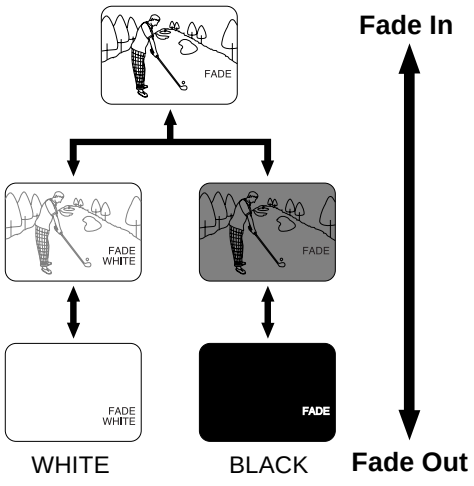

Before you begin...

- **Connect Camcorder to power source.**
- **Set POWER to CAMERA.**

1 **Press MENU** for MENU mode. **Press UP or DOWN** to select VIDEO EFFECTS.

```
▲                    PAGE 2/2
SELF DEMO        : OFF
DIGITAL WIPE     : OFF
MAGICPIX         : OFF
MOTIONSENSOR     : OFF
VIDEO EFFECTS    : FADE
                   BLACK

SELECT: PUSH UP/DOWN KEY
SET   : PUSH DISPLAY KEY
END   : PUSH MENU KEY
```

2 **Press DISPLAY** for VIDEO EFFECTS menu. **Press UP or DOWN** to select AUTO FADE.

```
--- VIDEO EFFECTS ---

AUTO FADE
DIGITAL FADE
DIGITAL FILTER

SELECT: PUSH UP/DOWN KEY
SET   : PUSH DISPLAY KEY
END   : PUSH MENU KEY
```

3 **Press DISPLAY** for AUTO FADE ; COLOR menu. **Press UP or DOWN** to select BLACK or WHITE.

```
--- AUTO FADE ; COLOR ---

BLACK
WHITE

SELECT: PUSH UP/DOWN KEY
SET   : PUSH DISPLAY KEY
```

4 **Press DISPLAY** to confirm entry. **Press MENU** to exit.

Fade In:

In RECORD/PAUSE mode, press FADE so “FADE” flashes in EVF or LCD monitor.

Press RECORD/PAUSE.
Recording starts as picture and sound gradually fade in.

Fade Out:

While recording, press FADE so “FADE” flashes in EVF or LCD monitor.

Press RECORD/PAUSE.
Picture and sound gradually fade out, and recording is paused.

If FADE is pressed accidentally, press again so “FADE” disappears in EVF or LCD monitor.

Special Features

Color Digital Fade

Choose from 7 fade effects in 8 different colors.

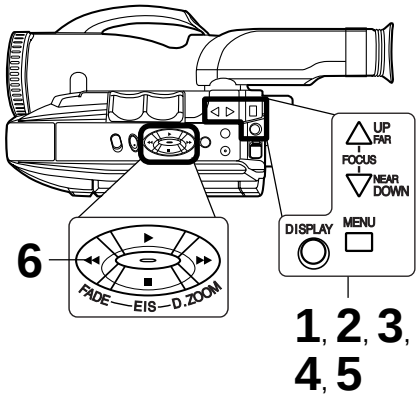

EVF or LCD monitor

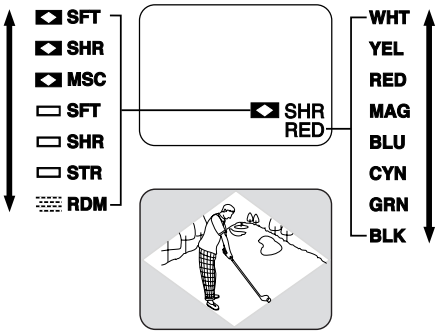

■ For more effects, stop fade in or fade out at any time (except RANDOM mode) by pressing FADE.
Then, press FADE to resume fade.

Note:
- Audio is not affected by fade.
- To cancel Digital Fade, do steps 1, 2, and 5. In step 2, select AUTO FADE.

Before you begin...

- **Connect Camcorder to power source.**
- **Set POWER to CAMERA.**

1 **Press MENU** for MENU mode.
Press UP or DOWN to select VIDEO EFFECTS.

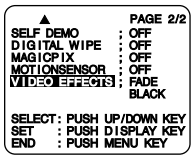

2 **Press DISPLAY** for VIDEO EFFECTS menu.
Press DOWN to select DIGITAL FADE.

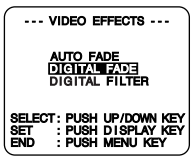

3 **Press DISPLAY** for DIGITAL FADE menu.
Press UP or DOWN to select TYPE.
Press DISPLAY for TYPE menu.
Press UP or DOWN to select from 7 different types of fades.
- A preview of each fade type is displayed as it is selected.

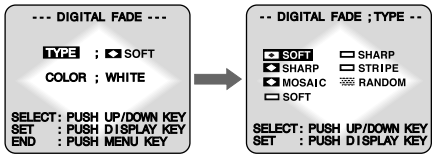

4 **Press DISPLAY** for DIGITAL FADE menu.
Press DOWN to select COLOR.
Press DISPLAY for COLOR menu.
Press UP or DOWN to select from 8 colors.
- A preview of each color is displayed as it is selected.

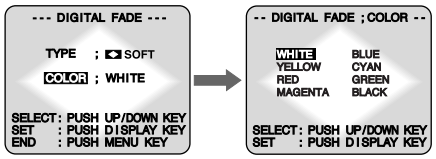

5 **Press DISPLAY** to confirm entry.
Press MENU twice to exit.

6 **Press FADE** for about 2 seconds to fade out during recording (selected fade type flashes). **Press FADE again** to fade in.

Color Digital Filter

Digital Filter adds one of 5 colors to entire picture, like a color filter.

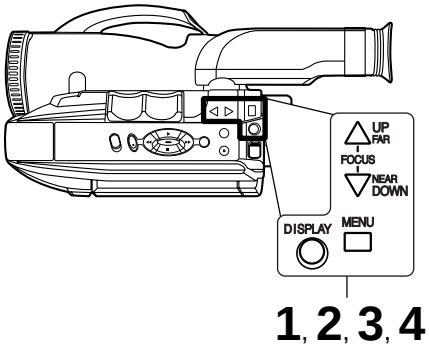

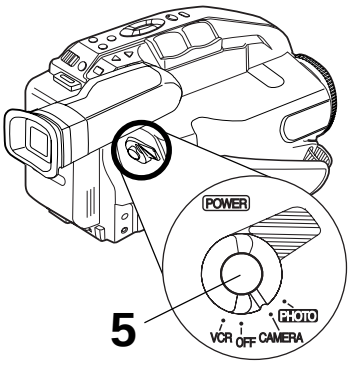

EVF or LCD monitor

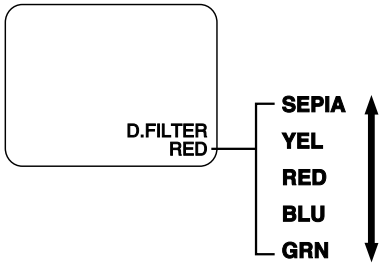

Before you begin...

- **Connect Camcorder to power source.**
- **Set POWER to CAMERA.**

1 **Press MENU** for MENU mode. **Press UP or DOWN** to select VIDEO EFFECTS.

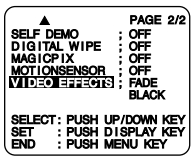

2 **Press DISPLAY** for VIDEO EFFECTS menu. **Press DOWN** to select DIGITAL FILTER.

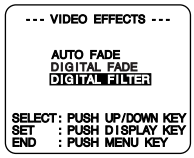

3 **Press DISPLAY** for DIGITAL FILTER menu. **Press UP or DOWN** to select from 5 colors.

- A preview of each color is displayed as it is selected.

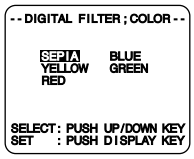

4 **Press DISPLAY** to confirm entry. **Press MENU** to exit.

5 Start recording (page 17).

- To cancel Digital Filter, **set POWER to OFF.**

Note:
- Color Digital Filter will not function during Still/Strobe/Wide.
- Picture returns to normal in Still mode.

Digital Zoom

Power Zoom magnification is digitally increased.

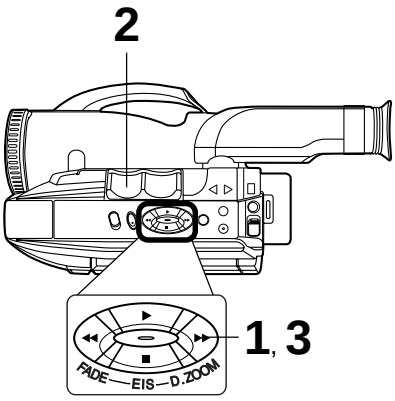

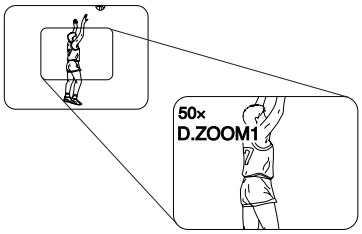

Before you begin...

- **Connect Camcorder to power source.**
- **Set POWER to CAMERA.**
- **Set DIGITAL WIPE to OFF in menu.**

1 **Press D. ZOOM.**

once →D.ZOOM 1
(PV-L452/PV-L652: 150× maximum)

twice →D.ZOOM 2
(PV-L452: 750x maximum)
(PV-L652: 800x maximum)

The Higher digital magnification levels may cause picture distortion.

2 **Hold down "T" on POWER ZOOM.**

Digital Zoom starts when normal zoom reaches maximum (20×).

- Zoom level appears in EVF or LCD monitor.
- POWER ZOOM switch controls digital zoom level.
- Normal zoom resumes when level falls to 20×.

3 **Press D. ZOOM** to turn off Digital Zoom so no indication appears.

Digital Electronic Image Stabilization (E.I.S.)

Helps stabilize picture when recording in unstable situations.

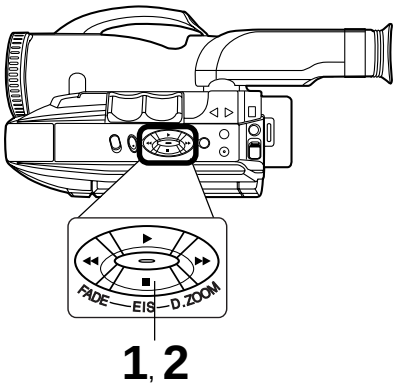

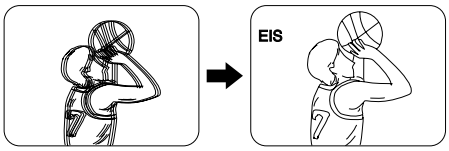

NORMAL

Digital EIS ON

Before you begin...

- **Connect Camcorder to power source.**
- **Set POWER to CAMERA.**

1 **Press EIS** to display “EIS” in the EVF or LCD monitor.

- Image becomes slightly enlarged and shutter speed auto-adjusts from 1/80 to 1/350 according to brightness.
- Use High Speed Shutter (page 26) if needed. Shutter speed setting remains after EIS is canceled.

2 **Press EIS again** to cancel when not in use.

E.I.S. may not function during...

- extreme Camcorder movement.
- recording of subjects with distinct horizontal or vertical stripes.
- low light situations (EIS indicator flashes).
- intense fluorescent lighting situations.
- recording of very fast motion.

Still/ Strobe/ Wide

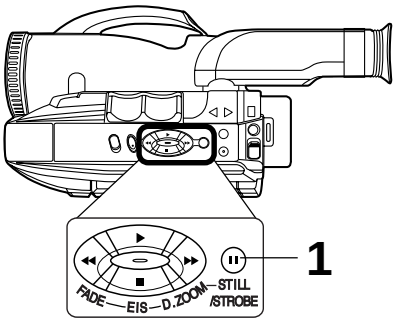

Before you begin...

- **Connect Camcorder to power source.**
- **Set POWER to CAMERA.**
- **Set DIGITAL WIPE to OFF in menu.**

1 **Press STILL/STROBE repeatedly** for desired function as described below.

Selection order

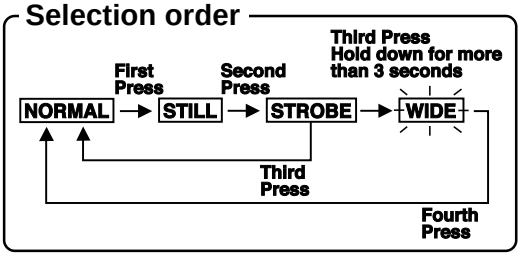

STILL

Records a still image from the current picture.

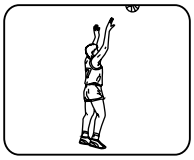

STROBE

Records a progression of still images in 1/6 of a sec. intervals.

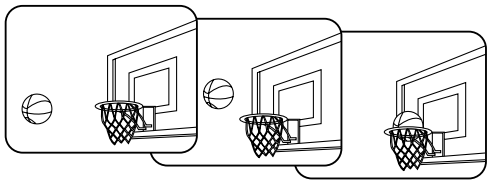

WIDE SCREEN

Records a picture that will fill entire screen of a wide screen (16×9 aspect ratio) TV.

- Picture appears distorted in EVF or LCD monitor.

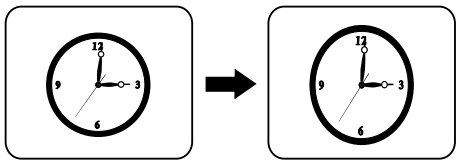

Normal **Wide**

Note:

- Pressing STILL/STROBE with DIGITAL WIPE set to ON will display “NOW IN DIGITAL WIPE” and Still/ Strobe/Wide feature cannot be used.
- Wide screen recordings must be played back on a wide screen TV (16×9 aspect ratio) or picture will be distorted.

MotionSensor

Recording starts automatically if motion is detected.

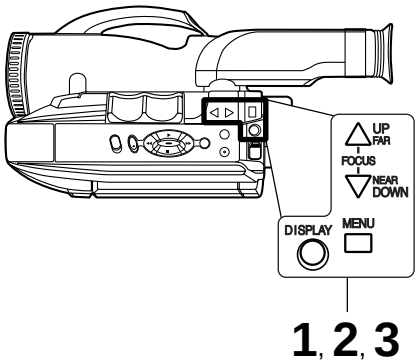

MotionSensor may mistakenly start when:

- background is plain, like a white wall, or has distinct vertical, horizontal, or slanted stripes, like a venetian blind.
- brightness suddenly changes.

MotionSensor may not start when:

- motion is very slow or fast.
- moving object is very small.
- motion occurs only in 1 corner of viewing area.
- in poor lighting (in this case, MOTIONSENSOR flashes).
- background is plain, like a white wall, or has distinct horizontal or vertical stripes.

Before you begin...

- **Connect Camcorder to power source. Use AC Adaptor for longer recordings.**
- **Insert cassette with record tab (page 11).**
- **Set POWER to CAMERA.**
- **Securely position and aim Camcorder.**

1 **Press MENU** for MENU mode. **Press UP or DOWN** to select MOTIONSENSOR.

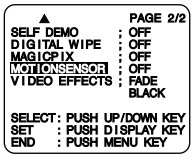

2 **Press DISPLAY** to select ON.

3 **Press MENU** for MotionSensor stand-by mode. (If cassette is not inserted, "↔" will flash.)

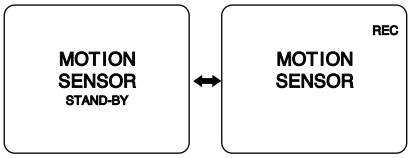

- Recording will start about 3 seconds after motion is detected.
- Date and time are recorded if displayed in EVF or LCD monitor (page 15).
- Recording stops about 30 seconds after motion ceases.

To cancel MotionSensor Mode, **set POWER to OFF.**

Note:

- MotionSensor recording starts if Camcorder is bumped or repositioned.
- This feature is not available during normal recording.
- While in MotionSensor stand-by, the following functions are not available: Record/Pause, Stand-by mode, Digital E.I.S., Video Effects (Auto/Digital Fade, Digital Filter).

Digital Still Camera

Memory Card* Insertion/ Removal

Before you begin...
- **Connect Camcorder to power source.**
- **Set POWER to OFF.**

*Memory Card: MultiMediaCard or SD Memory Card.
Captured images will be stored on the Memory Card.
Be sure to insert the Memory Card before using the Built-in Digital Still Camera.
Listed below are the Memory Cards which can be used with this Camcorder.

Memory Card	Capacity
Memory Card (LSFT0262) (supplied)	8 MB
MultiMediaCard (SanDisk brand)	8 MB, 16 MB
SD Memory Card (optional) (See page 51.)	16 MB, 32 MB, 64 MB

SD Memory Card write protection switch

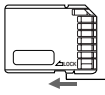

A write protection switch is located on the SD Memory Card. Sliding the switch to the "LOCK" position prevents writing on or formatting the card.

Write protection switch

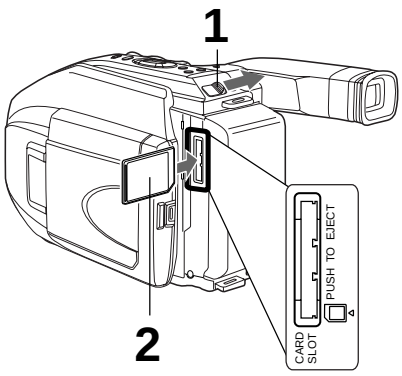

1 **Slide TAPE EJECT** to open door.

2 **Fully insert the Memory Card,** with the sloped corner down, into the Card Slot in the direction of the arrow. (See diagram.)

3 **Push in on the inserted Card** to eject.

Note:
- If Memory Card is not inserted, "NO CARD" appears on-screen.
- Do not insert card in wrong direction. (This would become the basis for trouble.)
- If "CARD ERROR" appears on-screen, see page 56.

■ Concerning the Memory Card

- Except for some special features, this card is compatible with other Panasonic brand products, like Digital Camera (DMC-LC5, DMC-F7).
- Panasonic only guarantees compatibility with Panasonic brand cards and those bearing the SanDisk logo.
- This Camcorder can capture a maximum of 697 still images because of camera memory capacity.
  In order to capture 697 images, a larger Memory Card (optional) with approx. 62 MB of memory is needed for FINE mode and approx. 21 MB is needed for Normal mode.

Cautions for the Memory Card :

- While Memory Card data is being read, do not remove it, turn off the power, or subject unit to vibrations and shocks.
- Do not leave the Memory Card in a place with high temperature, exposed to direct sunlight, or where electromagnetic waves and static electricity can be generated.
- Electromagnetic waves, static electricity, malfunction of the Camcorder or of the Memory Card itself could erase the data recorded on it. To prevent the loss of picture data, we recommend that you make a backup copy on the computer.
- Do not bend or drop the Memory Card as this could damage it or the captured contents.
- Do not touch the connector on the rear edge of the Memory Card with your fingers, and take care that no dirt, dust or water enters it.
- Do not affix other labels to the Memory Card face or back as Card insertion/removal may become impossible.

Recording

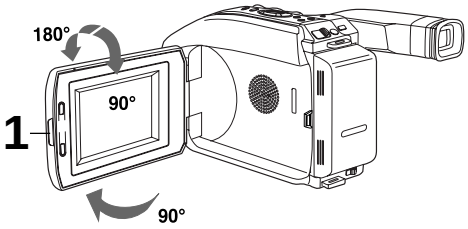

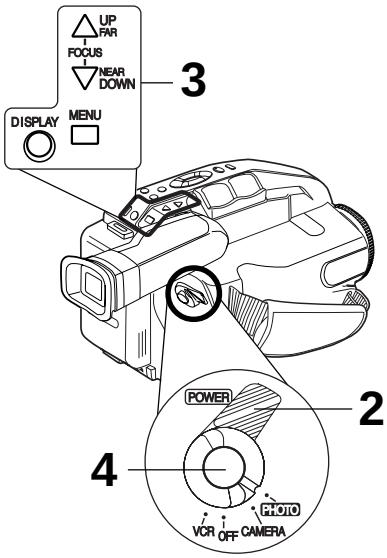

Note:
- Please note that the included 8 MB Memory Card already contains 12 pre-recorded titles for your use. Please see page 52 for further details.
- If Memory Card is not inserted, “NO CARD” appears on-screen.
  Set POWER to OFF, then insert the Memory Card.
- If “CARD ERROR” appears on-screen, see page 56.
- Sound will not be recorded.
- The features below are not available while in PHOTO mode.
  - Auto Fade
  - Digital Fade
  - Color Digital Filter
  - Digital Zoom
  - Digital E.I.S.
  - Still/Strobe/Wide
  - MotionSensor
  - Digital Wipe Mode
  - Picture in Picture Wipe Title

Before you begin...
- **Connect Camcorder to power source.**
- **Insert the Memory Card (page 34).**

1 **Press LCD-OPEN** and swing LCD monitor fully open. Adjust viewing angle.

2 **Set POWER to PHOTO.**
- Be sure POWER is fully rotated to PHOTO position.

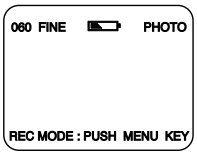

3 **Press MENU** for REC MODE menu. **Press UP or DOWN** to select **NORMAL** or **FINE** (page 48). Then, **press DISPLAY** to set.

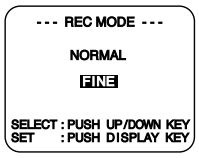

4 **Press RECORD/PAUSE** to capture image.
- As the image is processed, the status screens below appear.
  The next image may be captured after “COMPLETED” disappears.
- Depending on the image taken, the image page remaining indication may not change, or it may be decreased by 2 images.

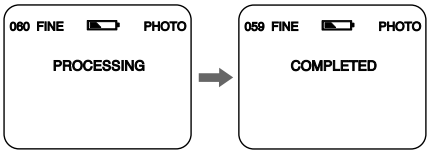

- For sharper images, set electronic shutter to higher speed when shooting in bright conditions, such as outdoors.

WARNING:
Do not, under any circumstances, remove the card immediately after pressing the RECORD/PAUSE (during recording of an image) or while deleting. This could damage the format of the card and make it unusable.

Digital Still Camera

Before you begin...

- **Connect Camcorder to power source.**
- **Insert the Memory Card (page 34).**
- **Set POWER to PHOTO.**

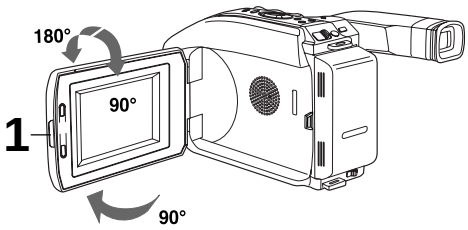

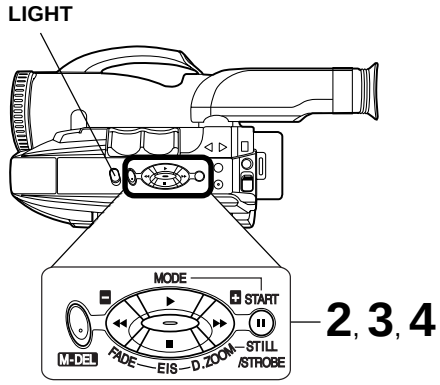

Note:

- If Memory Card is not inserted, "NO CARD" appears on-screen. Set Power to OFF, then insert the Memory Card.
- Pictures captured with other brand products cannot be used with this Camcorder.
- If "INCOMPATIBLE IMAGE" appears on-screen, the size of the captured image cannot be played back on this Camcorder.
- Do not change POWER setting to CAMERA or change recording mode while "PLEASE WAIT" is displayed.
- If "CARD ERROR" appears on-screen, see page 56.

Using the Light

For capture of still images in dim lighting.

Set LIGHT to AUTO.
When **RECORD/PAUSE** is pressed to capture an image in dim lighting, the Light comes on for about 2 seconds, the image is captured, then the light goes out.

Or, set LIGHT to ON/OFF manually.
(See page 16 for further details.)

Playback

1 **Press LCD-OPEN** and swing LCD monitor fully open. Adjust viewing angle.

2 **Press ▶ (PLAY)** to play mode.
The Multi Image Playback screen appears. The last captured image screen is underlined.

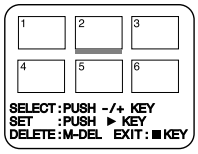

- If there are no recordings on the card, "NO PICTURE" appears on-screen.
- In NORMAL or FINE mode, the color of the Multi Image page number is as follows:

  NORMAL mode → green
  FINE mode → white

3 **Press + (FF) → next.**
Press – (REW) → previous.

- The selected image will be underlined in green.
- Continue pressing + (FF) or – (REW) for next or previous page.

4 **Press ▶ (PLAY)** to display image. This screen appears followed by image.

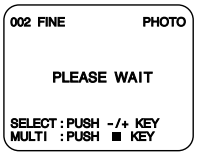

- Press DISPLAY to remove or redisplay this screen.
- Press ■ (STOP) to redisplay Multi Image playback screen.

Displayed Directory/Image Number

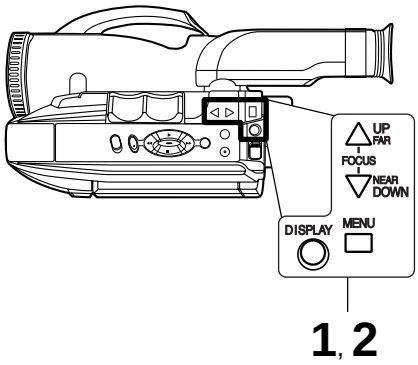

Before you begin...

- **Connect Camcorder to power source.**
- **Insert the Memory Card (page 34).**
- **Set POWER to PHOTO.**

1 Repeat steps 1 and 2 on page 36 to display Multi Image Playback screen. Select any image and press ▶ (PLAY).

2 **Press MENU** for DCF NUMBER DISPLAY menu.
Press UP or DOWN to select ON or OFF. Then, **press DISPLAY** to set.

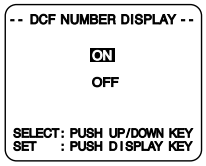

ON → Directory/Image Number is displayed.
OFF→ Directory/Image Number is not displayed.

Directory/Image Number

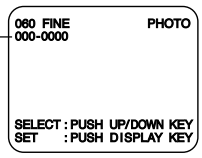

Note:
- Directory/Image Number “xxx-xxxx” (x indicates the number) is assigned automatically.
- Even if ON is set, if the Directory/Image Number does not correspond with DCF it is not displayed.
- The Directory/Image Number becomes the folder and file name when viewed with card reader.
- This product is compliant with DCF (Design rule for Camera File System). Images saved on the Memory Card using other Digital Still Cameras that are compliant with DCF can be viewed on this product.

Delete Specific Images

You can delete unwanted images and increase the remaining image memory.

Important :
Once deleted, images cannot be restored.

DELETE PAGE : Deleting Specific Image Pages.
DELETE ALL : Deleting All Image Pages.
FORMAT : Format the Memory Card.

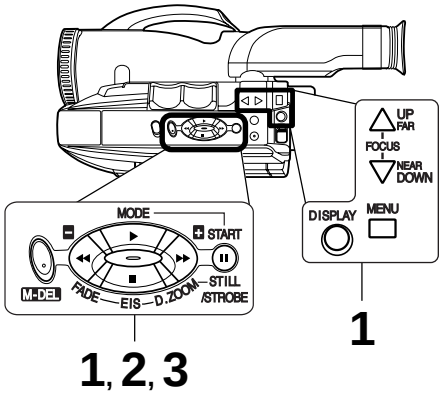

Note:
- Pictures captured with other brand products cannot be used with this Camcorder.
- If "CARD ERROR" appears on-screen, see page 56.

WARNING :
Do not, under any circumstances, remove the card immediately after pressing the RECORD/PAUSE (during recording of an image) or while deleting. This could damage the format of the card and make it unusable.

Before you begin...

- **Connect Camcorder to power source.**
- **Insert the Memory Card (page 34).**
- **Set POWER to PHOTO.**
  Press ▶ (PLAY) to play mode.

Deleting Specific Image Pages

1 **Press M-DEL** for DELETE menu.
Press UP or DOWN to select **PAGE**.
- To exit menu at any time, press STOP.

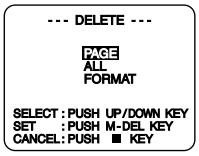

2 **Press M-DEL** for Multi Image screen. **Press + (FF) or - (REW)** to select image page.
Press M-DEL to set.

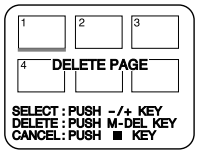

3 **Press M-DEL** to delete the page.
- As image pages are deleted, page numbers adjust automatically.

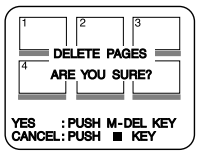

Deleting All Image Pages

1 **Do step 1 above, and select ALL.**

2 **Press M-DEL.**
The screen right is displayed.

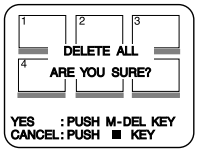

3 **Press M-DEL** to delete all pages.
- "NO PICTURE" appears on-screen after deletion.

Format the Memory Card

1 **Do step 1 above, and select FORMAT.**

2 **Press M-DEL.**
The screen right is displayed.

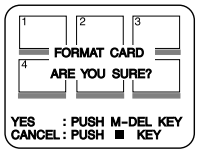

3 **Press M-DEL** and all image data is deleted from the Memory Card.
- "NO PICTURE" appears on-screen after deletion.

Picture in Picture Wipe Title

Captured still images (page 35) can be recorded along with the current picture.

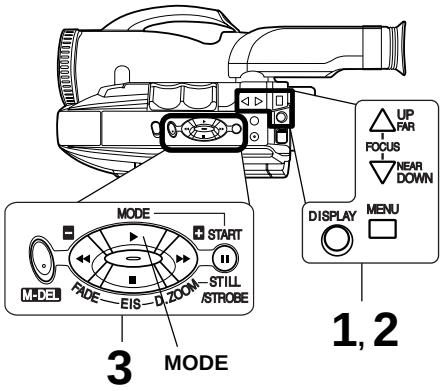

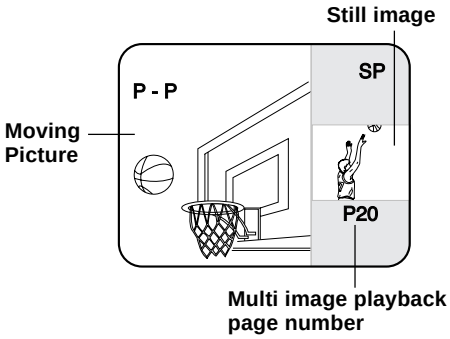

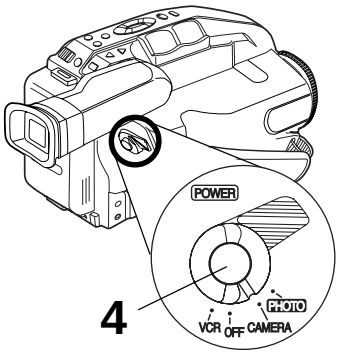

Before you begin...

- **Connect Camcorder to power source.**
- **Insert the Memory Card (page 34).**
- **Set POWER to CAMERA.**

(P - P = Picture in Picture)

1 **Press MENU** for MENU mode.
Press UP or DOWN to select DIGITAL WIPE.

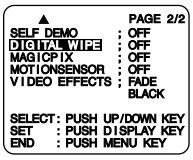

2 **Press DISPLAY** to select ON.
Press MENU to exit.

- A still image captured on the Memory Card and the Multi image playback page number is displayed on the right side of the screen.
- If there are no recordings on the card, “NO PICTURE” appears on-screen.

3 **Press + (FF) or - (REW) to select still image to be used.**

4 Start recording (page 17).

- When recording starts, Multi image playback number disappears. Then the captured still images can be recorded along with the current picture.
- To exit from the Picture in Picture Wipe title mode, **press MODE** (page 40).

Note:

- If Memory Card is not inserted, “NO CARD” appears on-screen. Set Power to OFF, then insert the Memory Card.
- Pictures captured with other brand products cannot be used with this Camcorder.
- If “INCOMPATIBLE IMAGE” appears on-screen, the size of the captured image cannot be played back on this Camcorder.
- If “CARD ERROR” appears on-screen, see page 56.
- If Picture in Picture Wipe Title is selected, the following functions are not available: MotionSensor, Auto Fade, Digital Fade, Color Digital Filter, Digital Zoom, Digital E.I.S., Still/Strobe/Wide.

Digital Still Camera

Digital Wipe Mode

Insert a captured still image into the current recording, or vice versa, in one of three wipe effects.

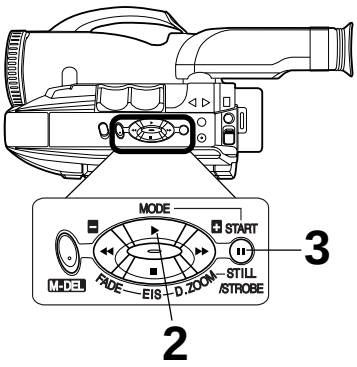

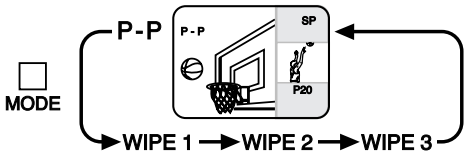

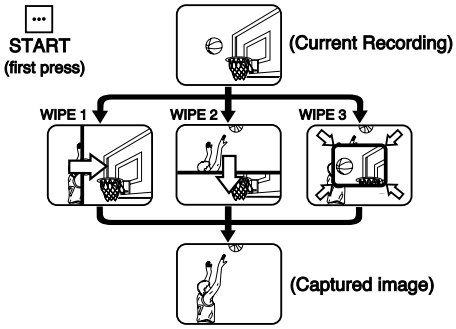

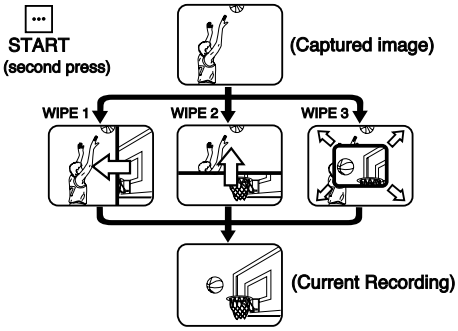

Before you begin...

- **Connect Camcorder to power source.**
- **Insert the Memory Card (page 34).**
- **Set POWER to CAMERA.**

1 Repeat steps 1-3 on page 39 to set Picture in Picture Wipe title.

2 **Press MODE repeatedly** for Wipe effect 1, 2, or 3 (See left).
- WIPE 1 will flash for a while to store the image for the wipe.

3 **Press START:**

once → inserts captured image.

twice → inserts current recording picture.

- You can freeze the wipe in progress by pressing START. Press START again to resume wipe.

Note:
- If Memory Card is not inserted, “NO CARD” appears on-screen. Set Power to OFF, then insert the Memory Card.
- Pictures captured with other brand products cannot be used with this Camcorder.
- If “INCOMPATIBLE IMAGE” appears on-screen, the size of the captured image cannot be played back on this Camcorder.
- If “CARD ERROR” appears on-screen, see page 56.
- If Digital Wipe mode is selected, the following functions are not available: MotionSensor, Auto Fade, Digital Fade, Color Digital Filter, Digital Zoom, Digital E.I.S., Still/Strobe/Wide.

PC Connection

Digital PhotoShot Software

A live or captured image can be transferred to your PC (Personal Computer).

Before you begin...

- **Turn your PC off.**
- **Set Camcorder POWER to OFF.**

System Requirements for Digital PhotoShot

- IBM PC/AT or compatible.
- Intel® Pentium® Processor.
- Microsoft® Windows®95 or Windows®98 or Windows®Me or Windows®2000.
- RAM: 16 MB or more.
- 2 MB of available hard-disk space.
- 256 color monitor (full color recommended).
- 3.5 inch 1.44 MB floppy disk drive (for installation).
- RS-232C serial port (D-Sub 9-pin).
  An adaptor (D-Sub 9-pin male to a D-Sub female) is required for a D-Sub 25-pin.
- Mouse or other pointing device.

PC-Camcorder Connection

Connect Camcorder PC jack to the serial port on your PC (Personal Computer) using the supplied PC connector cable.
Refer to PC or Windows manual to identify which COM port to be used for connection.

Note:
- Be sure to turn PC off before connection for proper image transfer.
- After Camcorder and PC are connected by starting up the software included, video recording is not possible.

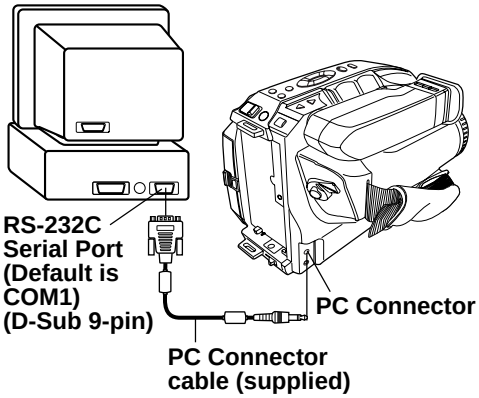

Software Installation (Windows 95/98/Me/2000)

Before you begin...

- **Your PC is in the power on mode.**

1 Turn on PC (Personal Computer) and start up Windows.

2 **Insert Digital PhotoShot disk (Windows 95/98/Me/2000)** into a floppy disk drive.

3 **Click on Start, then "Run..."**

4 **Type in "a:\setup.exe" and click OK.**
- If your 3.5 inch floppy disk drive is not "A", use appropriate letter.

5 Follow instructions as they appear on PC screen until the installation is complete.
- Setup window will disappear when the installation is complete.

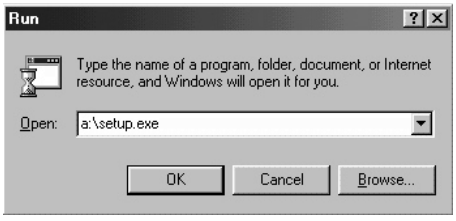

Special Features

PC Connection

Before you begin...

- **Insert the Memory Card (page 34).**
- **Make Camcorder-PC connections (page 41).**
- **Turn your PC on.**
- **Set Camcorder POWER to PHOTO.**

Running the Software (Windows 95/98/Me/2000)

1 **Select Programs/ Panasonic/Palmcorder/ Digital PhotoShot from the Start menu.**

2 **"Digital PhotoShot" is opened.**

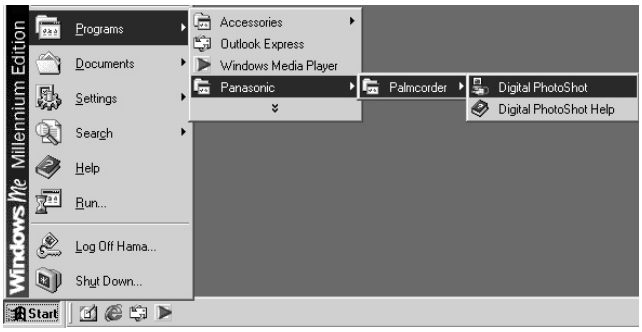

Note:
- COM Port and Baudrate are automatically selected.

Refer to Help for information about application operation and other Error messages.

Using Live Image Data

You can capture the current Camcorder picture to your PC.

1 Repeat steps 1 and 2 on above to run the Software.

2 **Click on "Window," then select "1 Live image Window."**

3 **Click on "Preview," then Click on "Capture."**
- Repeat this step to decide on an image.
- Captured image is transferred to your PC when you click on "Capture".

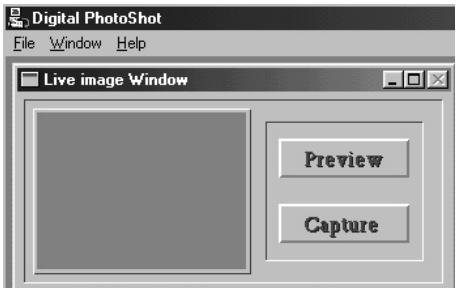

4 **Click on "Window," then select "Live photo Zoom In."**

5 **Click on "File," then select "Save As."**
- Captured image is stored to your PC.

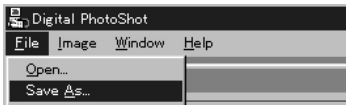

Note:
- If, while transferring the image to your PC, the displayed picture appears abnormal, restart the PC application and turn Camcorder POWER off, and then back on.

Before you begin...

- **Insert the Memory Card (page 34).**
- **Make Camcorder-PC connections (page 41).**
- **Turn your PC on.**
- **Set Camcorder POWER to PHOTO.**

Using Memory Card Image Data

Pictures captured with your Camcorder can be transferred to your PC.

1 Repeat steps 1 and 2 on page 42 to run the Software.

2 **"Preview Window"** screen appears.

3 Select the image data you want to transfer to your PC.
- The selected image will be underlined in green.

4 **Click on:**

Transfer
- The picture image is transferred to your PC and displayed.

Delete
- The picture image is deleted.

Save...
- The picture image is transferred to your PC and displayed. Save window appears.

Note:
- If, while transferring the image to your PC, the displayed picture appears abnormal, restart the PC application and turn Camcorder POWER off, and then back on.

Using PC Image Data

You can use JPEG or Bitmap files from your PC for Picture in Picture Wipe Title and Digital Wipe by transferring them to the Camcorder using the Digital PhotoShot Software.

1 Repeat steps 1 and 2 on page 42 to run the Software.

2 **Click on "Window," then select " 2 Preview Window."**

3 **Click on "File," then Click on "Open."**
- At your PC, please select and open the data you want to transfer to the Camcorder.

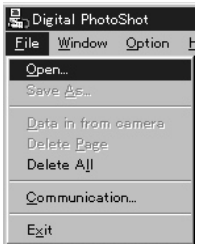

Note:
- When transferring image data larger than VGA size (640x480) from the PC to the Camcorder, the perimeter of the image is cropped to VGA size.

4 **Click on "File," then select "Data out to camera," then select Fine or Normal mode.**
- Your PC image data is transferred to the Camcorder.

PC Connection

Driver Quick Reference

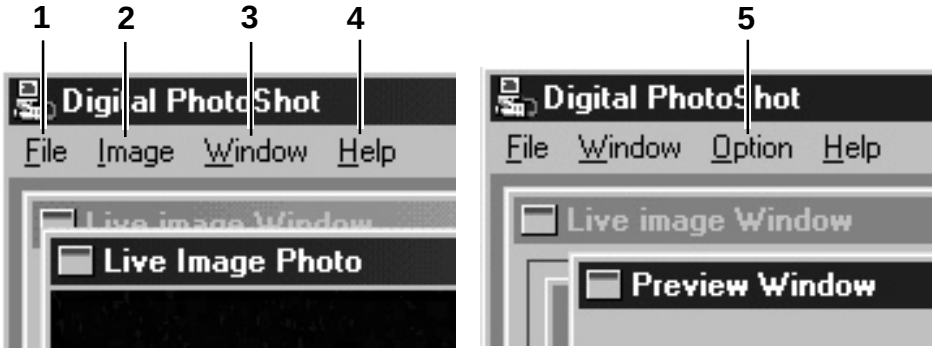

1 File
- **Open...**
  To open an existing image (Bitmap or JPEG).
- **Save As**
  To save the active image file under a new file name while preserving the original file.
- **Data in from CAMERA**
  To display a dialog box listing all images in the Card memory along with Preview, Transfer, Delete, etc. commands.
- **Delete Page**
  To delete the selected image from the Card memory.
- **Delete All**
  To delete all images from the Card memory.
- **Communication**
  To specify the port to which the Camcorder is connected.
- **Print...**
  To print the currently active image.
- **Exit**
  To quit the “Digital PhotoShot” application.

2 Image
- **Image Adjustment**
  To modify the captured image as desired.
- **Copy to Clipboad**
  To copy a view image to clipboad.

3 Window
- **Close Image**
  Select “Close image” to close all view windows.
- **Live Photo Zoom In**
  To open a view window.

4 Help
- **Help**
  To display the Help screen.
- **About**
  To display software version information.

5 Option
- **Reload**
  To load the picture from the Camcorder to your PC again when Camcorder Memory Card was changed.

Using a SD PCMCIA Adaptor (optional)

If your PC has a PCMCIA type II slot, you can insert the Memory Card into a SD PCMCIA adaptor (optional, page 51) to transfer images, captured with this Camcorder only, to your PC.

Inserting a Memory Card

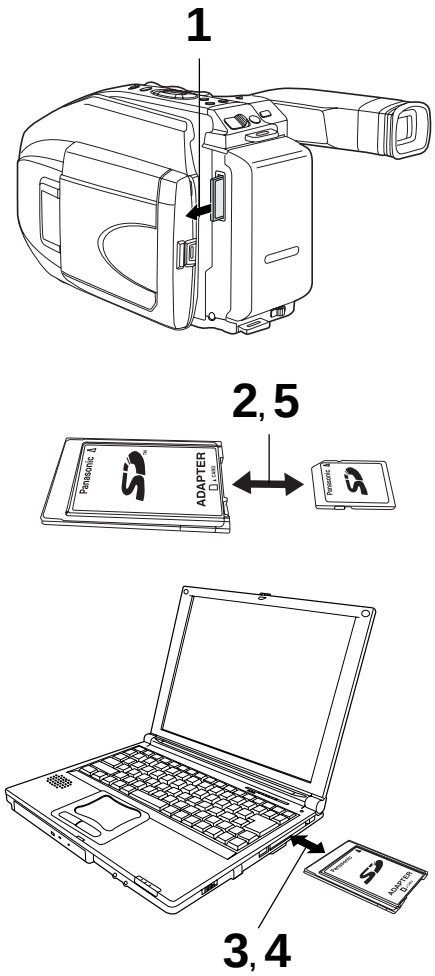

Before you begin...

- **Turn your PC on.**
- **Set Camcorder POWER to OFF.**

1 Remove the **Memory Card** from the Camcorder (page 34).

2 Hold the **Memory Card** so that the arrow side faces up and points toward the **SD PCMCIA Adaptor**. Securely insert the card into the SD PCMCIA Adaptor slot as far as it will go.

3 Hold the **SD PCMCIA Adaptor** so that the arrow side points toward the PCMCIA type II slot of **your PC (Personal Computer)**. Securely insert the SD PCMCIA Adaptor as far as it will go.

- Depending on the PC, it may be necessary to turn the SD PCMCIA Adaptor upside down in order to insert the card.

4 To remove, push the eject button on your PC (may vary by machine) and pull the **SD PCMCIA Adaptor** out until it is no longer inserted in the **PC (Personal Computer)**.

5 Pull the **Memory Card** out of the **SD PCMCIA Adaptor**.

Note:

- Do not remove the SD PCMCIA Adaptor from the PC while the PC is working or while image data is being transferred between the Memory Card and the PC (including operation such as opening and storing images), this will cause irreversible damage to the memory.
- If you change file name or folder in the memory card, the images will be displayed properly on PHOTO mode.
- If your PC does not have a PCMCIA type II slot but has a USB port, you can use the optional SD USB Reader/Writer (optional, see page 51).
  Please carefully read the Operating Instructions that come with the SD USB Reader/Writer before using.

Viewfinder/LCD Monitor Indications

Tape remaining and battery charge level can be displayed.

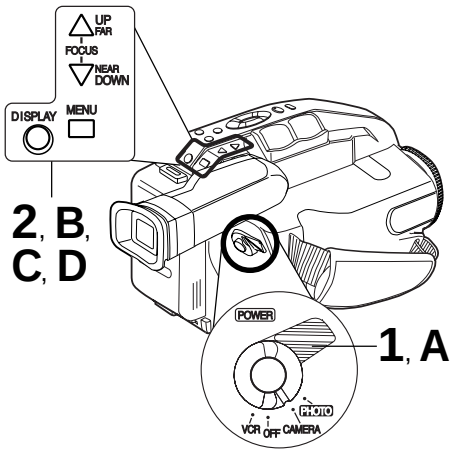

Battery Remaining: **Tape Remaining:**

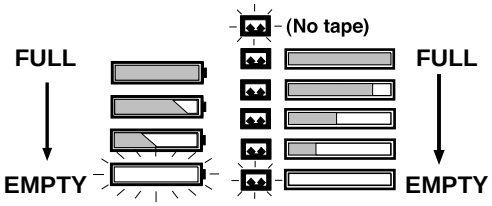

Before you begin...

- **Connect Camcorder to power source.**

1 **Set POWER to CAMERA.**

2 **Press DISPLAY repeatedly** to select the following displays.

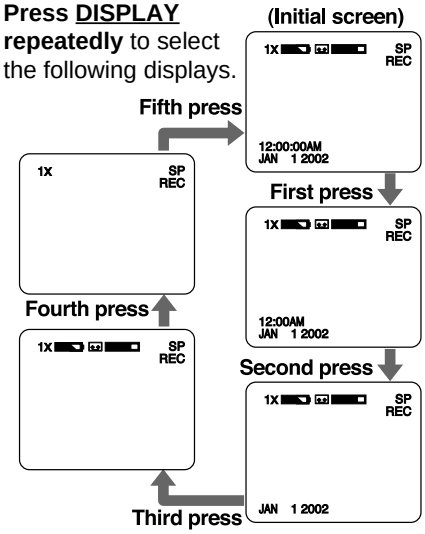

- Tape remaining indicator operates a few seconds after tape starts moving.

Recording the Date and Time

a Do steps 1 and 2 above to select time/date, date only, or no display.

b Start a recording (page 17).
- Only the Date and/or Time are recorded.

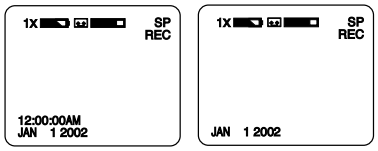

Display-Off Mode

A **Set POWER to CAMERA or VCR.**

B **Press MENU** for MENU mode.
Press UP or DOWN to select DISPLAY.

C **Press DISPLAY** to select OFF.
Press MENU to exit.

D **Press DISPLAY** repeatedly to remove time/date.

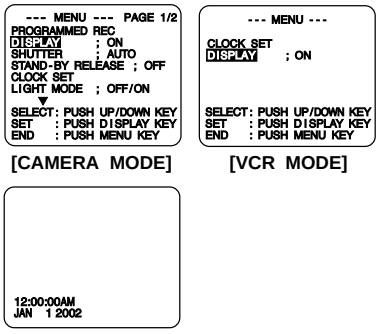

[CAMERA MODE] [VCR MODE]

Indications are restored the next time Camcorder is turned on.

Viewfinder/LCD Monitor Indications

CAMERA/VCR mode

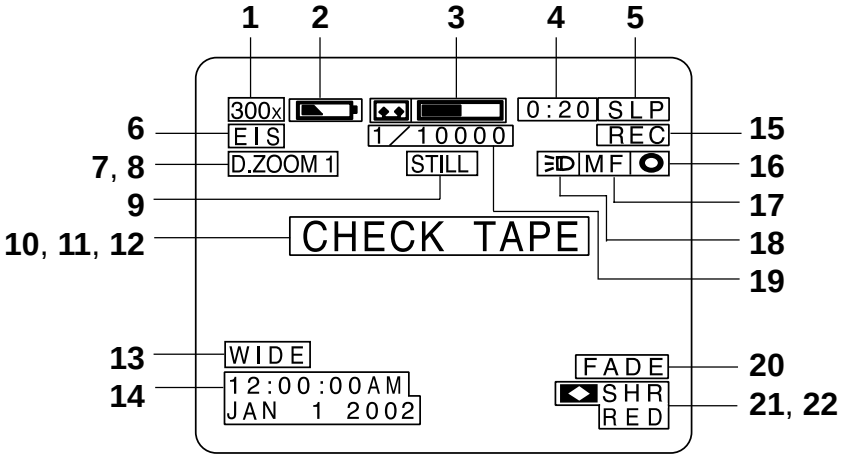

1 **Zoom Magnification level** (pages 23, 30).

2 **Battery Remaining** (page 46).
"WARNING LOW BATTERY" appears and Camcorder shuts off after 15 seconds.

3 **Tape Remaining** (page 46).

"" flashes and "TAPE END" appears for 5 seconds when:
- End of tape is reached.

"" flashes 1 minute and "CHECK TAPE" appears for 5 seconds when:
- RECORD/PAUSE is pressed with no cassette, or cassette has no record tab in Camera (RECORD) mode.
- PLAY, FF or REW is pressed with no cassette inserted in VCR mode.

4 **10-Second Reminder**
Each time a recording is started, a 10 second incremental display (up to 59:50) lets you monitor how long one scene is recorded.

0:00 0:10 0:20 . . . . . 59:50
(return to 0:00 and continue)

5 **TAPE SPEED** (pages 11, 17).
(SP=standard play,
SLP=super long play).

6 **Digital E.I.S.** (page 31).

7 **Digital Zoom** (page 30).

8 **Digital Wipe** (pages 39, 40).

9 **Still/Strobe** (page 32).

10 **VCR-MODE**
"VCR-MODE" appears 1 minute when POWER is set to VCR or if RECORD/PAUSE is pressed in VCR mode.

11 **DEW**
If moisture condensation occurs in unit, "WARNING DEW DETECTED" appears, and Camcorder will shut off in 15 seconds. Wait until "WARNING" no longer indicates when Camcorder is turned on to use.

12 **MotionSensor** (page 33).

13 **Wide Screen** (page 32).

14 **Date and Time** (pages 14, 15).

15 **Operating Mode**
- **REC** (record)
- **PAUSE**
- **FF** (fast forward)
- **PLAY**
- **REW** (rewind)

16 **Backlight** (page 23).

17 **Manual Focus** (page 25).

18 **Light ON/OFF/AUTO** (page 16).

19 **High Speed Shutter** (page 26).

20 **Fade** (page 27).

21 **Color Digital Fade** (page 28).

22 **Color Digital Filter** (page 29).

Viewfinder/LCD Monitor Indications

PHOTO mode

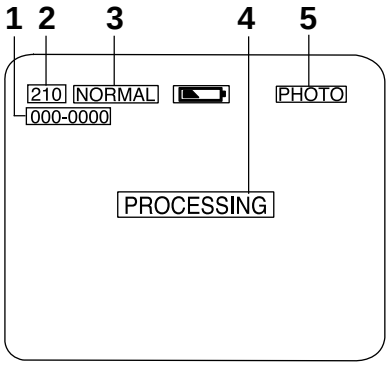

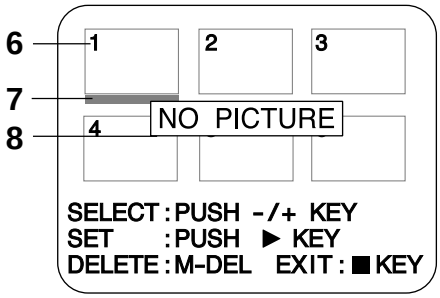

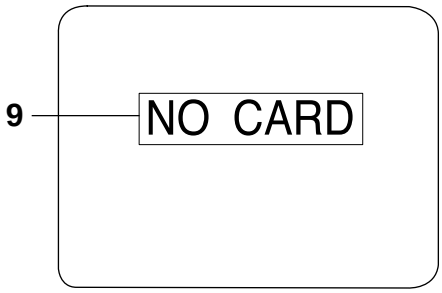

1 Directory/Image Number (page 37)

2 Image Page Remaining Indication (page 35)
- Image pages left in selected mode. "000" flashes when memory is full.
- Memory capacity provided all pictures are taken in the same mode:
  "NORMAL" mode ➞Approx 210 images (Supplied 8 MB Memory Card)
  "FINE" mode ➞Approx 60 images (Supplied 8 MB Memory Card)

3 REC MODE
- NORMAL or FINE mode.
- Image Size :
  "NORMAL" mode ➞ 320 x 240 pixels.
  "FINE" mode ➞ 640 x 480 pixels.

4 Image Status Indication
Image status is displayed when captured.

PROCESSING:
Image is being processed.
Note: Do not change setting to CAMERA or change recording mode while "PROCESSING" is displayed.

COMPLETED:
Image processing is completed.
The next image may be captured when "COMPLETED" disappears.

PLEASE WAIT:
Displayed when image is selected from Multi Image Playback screen.
Note: Do not change POWER setting to CAMERA or change recording mode while "PLEASE WAIT" is displayed.

5 Recording Mode
- POWER is set to PHOTO.

6 Multi Image Playback page number.

7 Currently selected image is underlined in green or white.
"NORMAL" mode ➞ green
"FINE" mode ➞ white

8 Image Status Indication

NO PICTURE:
No image is captured, all images are deleted from card.

9 MEMORY CARD Indication
When the Memory Card is not inserted in CAMERA or PHOTO mode, "NO CARD" appears.
If the Memory Card is defective, "CARD ERROR" appears.

Operation Notes

Cleaning EVF (Electronic Viewer Finder)

To Remove

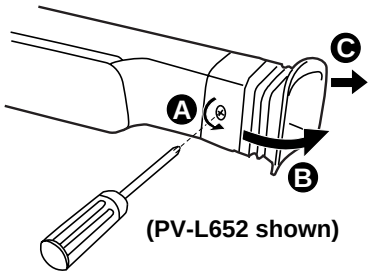

(PV-L652 shown)

1 Ⓐ Remove the screw with a Phillips screwdriver.
Turn counterclockwise.
Ⓑ Turn the EVF Eyepiece.
Ⓒ Pull the EVF Eyepiece.

2 Remove any lint or dust particles with a soft clean cloth being careful not to scratch the glass surfaces.

3 Replace the EVF Eyepiece and the screw.

Notice

For model PV-L452

This product utilizes both a Cathode Ray Tube (CRT) and other components that contain lead. It also has a fluorescent lamp containing a small amount of mercury. Disposal of these materials may be regulated in your community due to environmental considerations. For disposal or recycling information please contact your local authorities, or the Electronics Industries Alliance: <http://www.eiae.org.>

For model PV-L652

This product has a fluorescent lamp that contains a small amount of mercury. It also contains lead in some components. Disposal of these materials may be regulated in your community due to environmental considerations. For disposal or recycling information please contact your local authorities, or the Electronics Industries Alliance: <http://www.eiae.org.>

ATTENTION :

A nickel cadmium battery that is recyclable powers the product you have purchased. At the end of its useful life, under various state and local laws, it is illegal to dispose of this battery into your municipal waste stream. Please call 1-800-8-BATTERY for information on how to recycle this battery.

Replacing Clock Battery

The clock battery is pre-installed. Follow the steps below if replacement becomes necessary.

WARNING:

Replace battery with Panasonic PART NO. VSBW0004 (CR2025) only. Use of another battery may present a risk of fire or explosion.
Caution: Battery may explode if mistreated. Dispose of used battery promptly. Keep away from children. Do not recharge, disassemble or dispose of in fire.

Clock Battery

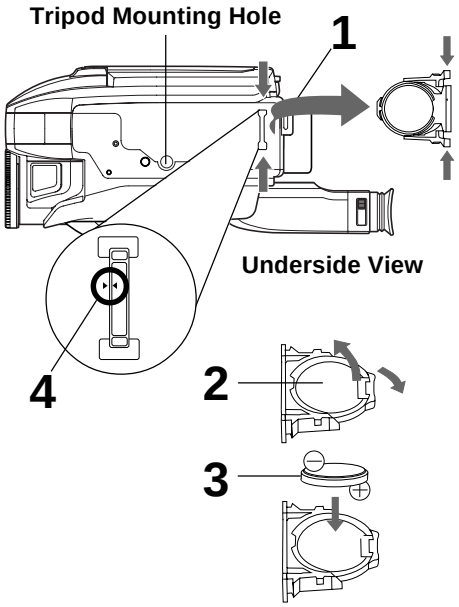

1 **While pinching the 2 tabs, pull Battery Tray out.**

2 **Bend middle tab out and remove Battery.**

3 **Snap new Battery** (⊕ mark down) into Battery Tray.
- Do not reverse the polarity.

4 **Insert Battery Tray** so the triangle marks meet.

Note:
- Keep Battery out of children's reach. Swallowing it may be harmful.
- Improper installation, discharge, or missing battery causes "CLOCK BATTERY" to appear when DISPLAY is pressed.
- Battery life is approximately 5 years.

Palmcorder Accessory System

To order instructions, see the Accessory Order Form page.
• The listed standard battery use times are based on continuous recording using this Palmcorder.

Accessory #	Figure	Description	Price
PV-A19		AC Adaptor with DC Power Cable (Charging of the Nickel Cadmium Battery or Nickel Metal Hydride Battery)	Call For Pricing
PV-A20		AC Adaptor with DC Power Cable (Charging of the Nickel Cadmium Battery or Nickel Metal Hydride Battery)	Call For Pricing
HHR-V60A/1B		Up to 6 hr Battery Pack (Rechargeable Nickel Metal Hydride Battery)	$119.95
HHR-V40A/1B		Up to 4 hr Battery Pack (Rechargeable Nickel Metal Hydride Battery)	$69.95
HHR-V20A/1B		Up to 2 hr Battery Pack (Rechargeable Nickel Metal Hydride Battery)	$59.95
PV-AA6		"AA" Battery Case	$20.00
PV-C16		Car Battery Cord	$70.00
PV-P1		VHS PlayPak	$39.95
PV-H18A		Soft Sided	$49.95
RP-SD064BPPA RP-SD032BPPA RP-SD016BPPA		64 MB SD Memory Card 32 MB SD Memory Card 16 MB SD Memory Card	Call For Pricing
BN-SDCAPE/1B		USB Reader/Writer for SD Memory Card (compatible with MultiMediaCard)	$79.95
BN-SDABPE/1B		SD PCMCIA Adaptor (compatible with MultiMediaCard)	$79.95

Note:
• Prices subject to change without notice.

Palmcorder Accessory System

Concerning the Memory Card (MultiMediaCard and SD Memory Card)

- Model PV-L452/PV-L652 can be used with either a MultiMediaCard or a SD Memory Card.
- Both of these exterior Memory Cards (MultiMediaCard and SD Memory Card) are lightweight and removable.
- Both Memory Cards (MultiMediaCard and SD Memory Card) are offered in a variety of memory sizes, so you can purchase a higher capacity Memory Card if desired.

Pre-recorded Titles

The supplied Memory Card is prerecorded with the following titles which can be inserted into a recording.

1
Palmcorder

2
Anniversary

3

Happy Birthday

4
Bon Voyage

5

Congratulations

6

Graduation

7

It's a Girl!

8

It's a Boy!

9
Our Wedding

10

Surprise!

11
The Wedding

12

Vacation!

Warning

- Titles can be permanently erased from the Memory Card, e.g. formatting the card or using the delete all images feature (page 38).
- If a title is erased, the remaining title numbers will change.

Palmcorder Accessory Order Form

Please photocopy this form when placing an order.

1. Palmcorder Model # _____

2. Items Ordered

Accessory #	Description	Price Each	Quantity	Total Price
			Subtotal	
			Your State & Local Sales Tax	
			Shipping & Handling	6.95
			Total Enclosed	

3. Method of payment (check one)

☐ Check or Money Order enclosed (NO C.O.D.SHIPMENTS)

☐ VISA Credit Card # _____

☐ MasterCard Expiration Date _____

☐ Discover Customer Signature _____

Make Check or Money Order to: PANASONIC ACCESSORIES

(Please do not send cash)

4. Shipping information (UPS delivery requires complete street address)

Ship To:
Mr.
Mrs.
Ms. _____
First Last

_____
Street Address

_____ _____ _____
City State Zip

Phone #:
Day ( ) _____
Night ( ) _____

TO OBTAIN ANY OF OUR PALMCORDER ACCESSORIES YOU CAN DO ANY OF THE FOLLOWING:

VISIT YOUR LOCAL PANASONIC DEALER
OR
CALL PANASONIC'S ACCESSORY ORDER LINE AT 1-800-332-5368
[6 AM-5 PM M-F, 6 AM-10:30 AM SAT, PACIFIC TIME]
OR
MAIL THIS ORDER TO: PANASONIC SERVICES COMPANY ACCESSORY ORDER OFFICE
20421 84th Avenue South Kent, WA. 98032

Specifications

Power Source:	Compact VHS Camcorder: DC 6 V AC Adaptor: 110/120/220/240 V AC, 50/60 Hz Battery: Nickel-Cadmium Type DC 6 V
Power Consumption:	Compact VHS Camcorder: 6V DC 8.5 W (Max. 11.5 W) AC Adaptor: 19 W 1.2 W (when not in use.)
Video Signal:	EIA Standard (525 lines, 60 fields) NTSC color signal
Video Recording System:	2 rotary heads plus flying erase head. Helical scanning system
Audio:	1 track
Pick-Up System:	Sequential color difference field reverse system
Pick-Up Device:	One integral color filter Charge Coupled Device (CCD)
Lens:	20:1 zoom lens, F1:1.7 with auto iris control Focal length: 3.8 mm - 76.0 mm 4 speed power zoom function
Viewfinder:	10.2 mm (0.4 inch) Electronic Viewfinder **(PV-L452)** 14 mm (0.55 inch) Liquid Crystal Color Electronic Viewfinder **(PV-L652)**
LCD Monitor:	63.5 mm (2.5 inch) Liquid Crystal Display **(PV-L452)** 76.2 mm (3.0 inch) Liquid Crystal Display **(PV-L652)**
Memory:	8 MB SD Memory Card
Image Size:	FINE: 640 × 480 pixels Normal: 320 × 240 pixels
Image Storage:	FINE: Approx. 60 images Normal: Approx. 210 images
Image Format:	JPEG
Minimum Illumination Required:	0.8 lx (F1:1.6) 0.08 footcandles 7 lx (F1:1.6) 0.7 footcandles (EIA Standard)
Operating Temperature:	0 °C~40 °C (32 °F~104 °F)
Operating Humidity:	10 %~75 %
Weight:	Compact VHS Camcorder: 1.00 kg **(PV-L452)** 2.20 lbs. 0.98 kg **(PV-L652)** 2.16 lbs. AC Adaptor: 0.3 kg 0.66 lbs.
Dimensions:	Compact VHS Camcorder: 106 (W) × 125 (H) × 190.5 (D) mm **(PV-L452)** 4-3/16 (W) × 4-15/16 (H) × 7-1/2 (D) inch 109.5 (W) × 122.5 (H) × 190.5 (D) mm **(PV-L652)** 4-5/16 (W) × 4-13/16 (H) × 7-1/2 (D) inch AC Adaptor: 68 (W) × 41 (H) × 140 (D) mm 2-11/16 (W) × 1-5/8 (H) × 5-1/2 (D) inch

Weight and dimensions shown are approximate.
Designs and specifications are subject to change without notice.

Before Requesting Service

If a problem arises, you may be able to correct it yourself.
See Symptom and Correction list below.

Symptom	Correction
No picture in EVF or LCD monitor ...	• Connect Power Source. (pp. 9, 10) • Set POWER to VCR or CAMERA. (pp. 17, 20) • Check for Dew Indication. (p. 47) • Use fully charged Battery. (p. 9) • Firmly connect all needed cables. (p. 10)
The right side of the screen appears grayish...	• Be sure DIGITAL WIPE is set to ON. (p. 39)
Video cassette cannot be inserted ...	• Connect Power Source. (pp. 9, 10) • Insert cassette, window side facing out. (p. 11)
Video cassette cannot be removed ...	• Connect Power Source. (pp. 9, 10)
Operation buttons do not work ...	• Check for Dew Indication. (p. 47)
Recording cannot be done ...	• Make sure record tab is intact. (p. 11) • Check Battery Indicator. (p. 46) • Check for Dew Indication. (p. 47)
Auto Focus does not operate ...	• Set FOCUS to AUTO. (p. 25) • Set POWER to CAMERA. (p. 17)
Sound from microphone can't be monitored ...	• Set unit to REC or Record/Pause mode.
Camera picture is too dark ...	• Set HIGH SPEED SHUTTER to AUTO. (p. 26)
No playback picture, or the playback picture is noisy or contains streaks ...	• Press UP/DOWN button during playback (Tracking Control). (p.20)
"Panasonic ITS TAPES CAN PLAY IN YOUR VCR ..." appears in EVF or LCD Monitor ...	• Set POWER to CAMERA, then set SELF DEMO : OFF in MENU screen to cancel Demo mode. (p. 7)
"NO CARD" appears in EVF or LCD Monitor ...	• Make sure Memory Card is inserted. (p. 34)
Cannot capture the image ...	• Set POWER to PHOTO. (p. 35) • No memory remaining. Delete some images before capturing more images.
Cannot playback Still image ...	• Set POWER to PHOTO. (p. 36) • Make sure Memory Card is inserted. (p. 34)
"NO PICTURE" appears in EVF or LCD Monitor ...	• There are no images in memory.
Top of playback picture waves back and forth excessively ...	• A playback signal is not as stable as an off the air TV signal, so the top of your TV screen may appear bent or unstable during playback. This is called, "Horizontal AFC time constant change." To correct, slowly turn the TV horizontal hold control. If your TV does not have this control, or adjusting it does not help, contact your TV service center. (Some nominal service charges may be required.)

Video Head Cleaning

Clogged Video Head

While head cleaning is normally not needed, playing old or damaged tapes may clog the heads. When playback picture resembles example at the left, head cleaning is required.

Ideally, head cleaning should be performed by a qualified service technician. When this is not possible, purchase a head cleaning cassette. Be sure to follow cleaning cassette instructions exactly and only use when symptoms occur.

Before Requesting Service

Self Diagnostic System

If any of the following numbers appear on-screen, the camcorder may have a problem. Do not remove the battery (if attached) and write down the displayed number on below. Then, take the camcorder to a service center for repair.

Error No.	Description
U11	Card Error
U12	Card Error
U13	Card Error
U14	Card/Camcorder Dialogue Error
U15	No Card Memory
U16	Captured image limit exceeded
U17	Captured image limit exceeded
U30	Error other than above

Request for Service Notice

Please photocopy this form when making a request for service notice.

Request for Service Notice:

In the unlikely event this product needs service.

- Please include your **proof of purchase**. (Failure to due so will delay your repair.)
- To further speed your repair please provide an explanation of what is wrong with the unit and any symptom it is exhibiting.

_____

_____

_____

Mail this completed form and your Proof of Purchase along with your unit to:
Panasonic Services Company
1705 N. Randall Road
Elgin, IL. 60123-7847
Attn: Camcorder Repair

Please write the displayed Self Diagnostic number here.
(See above)

Panasonic Consumer Electronics Company,
Division of Matsushita Electric Corporation
of America, One Panasonic Way
Secaucus, New Jersey 07094

Panasonic Sales Company,
Division of Matsushita Electric of Puerto Rico, Inc.
AVE. 65 de Infantería, Km. 9.5 San Gabriel
Industrial Park, Carolina, Puerto Rico 00985

PANASONIC/QUASAR Video Products
Limited Warranty

Panasonic Consumer Electronics Company or Panasonic Sales Company (collectively referred to as "the Warrantor") will repair or replace this product with new or refurbished parts or equivalent product, free of charge, in the USA or Puerto Rico, in the event of a defect in materials or workmanship as follows (all time periods commence from the date of the original purchase):

PRODUCT	PARTS	LABOR	SERVICE	CONTACT NUMBER
CAMCORDER	ONE (1) YEAR, EXCEPT CCD IMAGE SENSOR CCD IMAGE SENSOR - SIX (6) MONTHS	NINETY (90) DAYS NINETY (90) DAYS	Carry-In or Mail-In	1-800-211-PANA(7262)
DVD/VCR DECK	ONE (1) YEAR	NINETY (90) DAYS	Carry-In or Mail-In	1-800-211-PANA(7262)
DIGITAL STILL CAMERA	ONE (1) YEAR, EXCEPT CCD IMAGE SENSOR CCD IMAGE SENSOR - SIX (6) MONTHS	NINETY (90) DAYS NINETY (90) DAYS	Carry-In or Mail-In	1-800-272-7033
A/V MIXER	ONE (1) YEAR	NINETY (90) DAYS	Carry-In or Mail-In	1-800-211-PANA(7262)
TV/VCR, TV/DVD TV/DVD/VCR COMBINATION	ONE (1) YEAR, EXCEPT CRT CRT - TWO (2) YEARS	NINETY (90) DAYS CRT - NINETY (90) DAYS	Carry-In: 21" CRT and Smaller In-Home or Carry-In: 22" CRT and Larger	1-800-211-PANA(7262)
TV/HDR COMBINATION	ONE (1) YEAR, EXCEPT CRT CRT - TWO (2) YEARS	NINETY (90) DAYS CRT - NINETY (90) DAYS	In-Home or Carry-In	1-888-843-9788

Batteries (if included) - New rechargeable batteries in exchange for defective rechargeable batteries for ten (10) days. Non-rechargeable batteries are not warranted.

Tape (if included) - New video cassette tape in exchange for a defective video cassette tape for five (5) days.

Memory cards (if included) - Exchange defective item for new one for ninety (90) days.

In-home, carry-in or mail-in service, as applicable, in the USA can be obtained during the warranty period by contacting a Panasonic Services Company (PASC) Factory Servicenter listed in the Servicenter Directory. Or call toll free contact number listed above, to locate an authorized PASC Servicenter. Carry-in or mail-in service in Puerto Rico can be obtained during the warranty period by calling the Panasonic Sales Company telephone number listed in the Servicenter Directory.

This warranty is extended only to the original purchaser. A purchase receipt or other proof of the date of the original purchase is requires before warranty service is rendered.

This warranty only covers failures due to defects in materials and workmanship, which occur during normal use and does not cover normal maintenance, including, but not limited to, video and audio head cleaning. The warranty does not cover damage which occurs in shipment, or failures which are caused by products not supplied by the warrantor, or failures which result from accident, misuse, abuse, neglect, mishandling, misapplication, alteration, modification, faulty installation, set-up adjustments, improper antenna, inadequate signal pickup, maladjustment of consumer controls, improper operation, power line surge, improper voltage supply, lightning damage, commercial use such as hotel, office, restaurant, or other business or rental use of the product, or service by anyone other than a PASC Factory Servicenter or a PASC authorized Servicenter, or damage that is attributable to acts of God.

LIMITS AND EXCLUSIONS

There are no express warranties except as listed above.

THE WARRANTOR SHALL NOT BE LIABLE FOR INCIDENTAL OR CONSEQUENTIAL DAMAGES (INCLUDING, WITHOUT LIMITATION, DAMAGE TO RECORDING MEDIA) RESULTING FROM THE USE OF THIS PRODUCTS, OR ARISING OUT OF ANY BREACH OF THE WARRANTY. ALL EXPRESS AND IMPLIED WARRANTIES, INCLUDING THE WARRANTIES OF MERCHANTABILITY AND FITNESS FOR PARTICULAR PURPOSE, ARE LIMITED TO THE APPLICABLE WARRANTY PERIOD SET FORTH ABOVE.

Some states do not allow the exclusion or limitation of incidental or consequential damages, or limitations on how long an implied warranty lasts, so the above exclusions or limitations may not apply to you.

This warranty gives you specific legal rights and you may also have other rights, which vary, from state to state. If a problem with this product develops during or after the warranty period, you may contact your dealer or Servicenter. If the problem is not handled to your satisfaction, then write to the Consumer Affairs Department at the Panasonic Consumer Electronics Company address above.

SERVICE CALLS WHICH DO NOT INVOLVE DEFECTIVE MATERIALS OR WORKMANSHIP AS DETERMINED BY THE WARRANTOR, IN ITS SOLE DISCRETION, ARE NOT COVERED.
COSTS OF SUCH SERVICE CALLS ARE THE RESPONSIBILITY OF THE PURCHASER.
warvid 02/ 12/ 2001

Servicenter List

For Product Information, Operating Assistance, Literature Request, Dealer Locations, and all Customer Service inquiries please contact:
1-800-211-PANA (7262), Monday-Friday 9 am-9 pm; Saturday-Sunday 9 am-7 pm, EST.
or send e-mail to : consumerproducts@panasonic.com

Web Site: http://www.panasonic.com
You can purchase parts, accessories or locate your nearest servicenter by visiting our Web Site.

Accessory Purchases:

1-800-332-5368 (Customer Orders Only)
Panasonic Services Company 20421 84th Avenue South, Kent, WA 98032
(6 am to 5 pm Monday - Friday; 6 am to 10:30 am Saturday; PST)
(Visa, MasterCard, Discover Card, American Express, Check)

Factory Servicenters Locations

CALIFORNIA
6550 Katella Avenue
Cypress, CA 90630

800 Dubuque Avenue
S. San Francisco,
CA 94080

3878 Ruffin Road
Suite A
San Diego, CA 92123

FLORIDA
3700 North 29th Avenue
Suite 102
Hollywood, FL 33020

GEORGIA
8655 Roswell Road
Suite 100
Atlanta, GA 30350

ILLINOIS
1709 North Randall Road
Elgin, IL 60123

MASSACHUSETTS
60 Glacier Drive
Suite G
Westwood, MA 02090

MINNESOTA
7850-12th Avenue South
Airport Business Center
Bloomington, MN 55425

OHIO
2236 Waycross Road
Civic Center Plaza
Forest Park, OH 45240

PENNSYLVANIA
2221 Cabot Blvd. West
Suite B
Langhorne, PA 19047

TEXAS
13615 Welch Road
Suite 101
Farmers Branch,
TX 75244

WASHINGTON
20425-84th Avenue
South
Kent, WA 98032

HAWAII
99-859 Iwaiwa Street
Aiea, Hawaii 96701
Phone (808) 488-1996
Fax (808) 486-4369

Service in Puerto Rico

Matsushita Electric of Puerto Rico, Inc. Panasonic Sales Company/ Factory Servicenter:
Ave. 65 de Infantería. Km. 9.5, San Gabriel Industrial Park, Carolina, Puerto Rico 00985
Phone (787) 750-4300 Fax (787) 768-2910

As of Sep. 2001

Spanish Quick Use Guide/Guía Para Uso Rápido

Antes de comenzar...

• **Inserte un casete con lengüeta para prevención del grabado.**

Cargue la batería

Cargue completamente la batería antes de usarla.

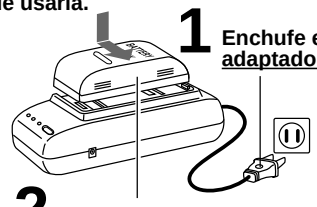

1 **Enchufe el adaptador de CA.**

2 **Instale la batería.** El indicador de carga (CHARGE) parpadea, luego queda encendido si ha terminado la carga. **Desmonte la batería.**

Inserte el casete

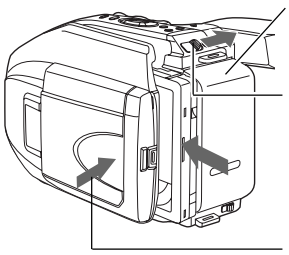

1 **Coloque la batería cargada.**

2 **Deslice TAPE EJECT** para abrir la compuerta.

3 **Inserte el casete.**

4 **Presione aquí** para cerrar la compuerta.

Grabación con la videocámara

Cuando el monitor LCD está completamente abierto, el visor se desconecta automáticamente (PV-L652).

1 **Presione LCD-OPEN** para abrir el monitor LCD.
Abralo completamente y ajuste el ángulo.

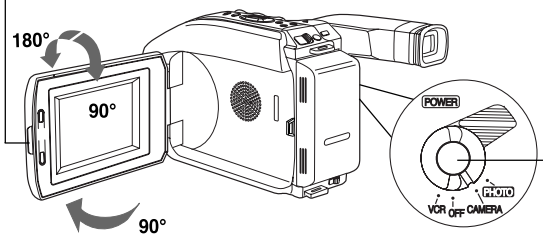

2 **Ajuste POWER a CAMERA.**

3 **Presione RECORD/PAUSE** para comenzar la grabación.
Presione RECORD/PAUSE otra vez para hacer una pausa en la grabación.

Reproduzca usando el monitor LCD

Cuando el monitor LCD está completamente abierto, el visor se desconecta automáticamente (PV-L652).

1 **Presione LCD-OPEN** para abrir el monitor LCD.
Abralo completamente y ajuste el ángulo (vea arriba).

2 **Ajuste POWER a VCR.**

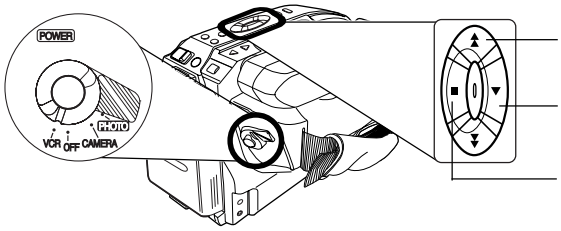

3 **Presione REWIND/SEARCH** para rebobinar la cinta.

4 **Presione PLAY** para comenzar la reproducción.

5 **Presione STOP** para finalizar la reproducción.

Reproduccion con efectos especiales

Para localizar rapidamente una escena especifica
- Oprimir el botón de localización (SEARCH).

Para congelar una imagen
- Oprimir el botón de pausa/imagen fija (PAUSE/STILL).
- Oprimir nuevamente el botón cuando se desea continuar reproduciendo.

Index

Symbols

+ (FF) Button 36, 38, 39
- (REW) Button 36, 38, 39

A

AC Adaptor 10
Accessories (Optional) 51
Accessories (Supplied) 2
Audio/Video Cable 21, 22
Audio/Video Out 21, 22
Auto Daylight Saving Time ... 15

B

Backlight 23
B.LIGHT Button 23
Battery Pack 9, 10
BATTERY RELEASE Button .. 9
Before Requesting Service 55, 56
BRIGHT ADJUSTMENT . 17, 20
Built-in Microphone 17

C

Camera Recording ..... 17~19
Car Battery Cord 10
Cassette Information 11
Charging Battery 9
Cleaning EVF 49
Clock Battery 50
Clock Set 14, 15
Color Digital Filter 29
Copying your Tapes 22

D

D.ZOOM Button 30
DC IN 10
DC Power Cable 10
Digital E.I.S. 31
Digital PhotoShot Disk 41
Digital Still Camera ..... 34~40
Digital Wipe Mode 40
Digital Zoom 30
DISPLAY Button 13, 20, 46
Display-off Mode 46

E

EIS Button 31

F

Fade 27, 28
FADE Button 27, 28
FAST FORWARD/SEARCH Button 20
Focus 25

H

Hand Strap 12
High Speed Shutter 26

L

LCD Monitor 17, 20, 35, 36
LCD-OPEN Button 17, 20, 35, 36
Lens Cap 12
Light 16, 36
LIGHT Switch 16, 36
Limited Warranty 57

M

MagicPix™ Images 24
Memory Card 34, 45
MENU Button 13
MENU Mode 13
M-DEL Button 38
M.FOCUS Button 25
MODE Button 39, 40
MotionSensor 33

P

PC Connection ..... 41~44
PC Connector 41
PCMCIA Adaptor 45
Picture in Picture Wipe Title . 39
PLAY Button 20, 36
Playback 20, 21
PlayPak 21
Power Supply 9, 10
POWER Switch 7, 17, 20, 35
POWER ZOOM Button 23, 25, 30
Pre-recorded Titles 52
Programmed Recording 19

Q

Quick Operation Guide 8

R

RECORD/PAUSE Button 17, 35
Record/Playback Time 11
Replacing Clock Battery 50
Request for Service Notice .. 56
REWIND/SEARCH Button ... 20

S

Safety Precautions 3
Self Demo Mode 7
Self Diagnostic System 56
Servicenter List 58
Shoulder Strap 12
Speaker 20
Special Effects 20
Specifications 54
START Button 40
STILL Button 20
Still Picture 20
STILL/STROBE Button 32
Still/Strobe 32
STOP Button 20

T

Tab 11
TAPE EJECT Switch 11, 17, 34
TAPE SPEED Button 17
Tracking Control 20
Tripod Mounting Hole 50

U

UP (FAR) / DOWN (NEAR) Button 13, 20, 25

V

VHF Connecting Cable 22
Video Cassettes (tapes) 11
Video Head Cleaning 55
Viewfinder/LCD Monitor Indications ..... 46~48
Viewing (TV/VCR) 21
VISION ADJUSTMENT 17
VOLUME 20

W

Wide (Screen) 32

Z

Zoom 23, 30

Panasonic Consumer Electronics Company,
Division of Matsushita Electric Corporation of America
One Panasonic Way Secaucus, New Jersey 07094

Panasonic Sales Company (“PSC”),
Division of Matsushita Electric of Puerto Rico, Inc.
Ave. 65 de Infanteria, Km. 9.5 San Gabriel Industrial Park Carolina,
Puerto Rico 00985

P

Printed in Indonesia
LSQT0529C
S1101-2122

1. **Important safety notice**
   Components identified by the sign ⚠ have special characteristics important for safety. When replacing any of these components. Use only the specified parts.

2. Do not use the part number shown on this drawing for ordering.
   The correct part number and part value is shown in the parts list, and may be slightly different or amended since this drawing was prepared.

3. Use only original replacement parts:
   To maintain original function and reliability of repaired units, use only original replacement parts which are listed with their part numbers in the parts list section of the service manual.

4. Parts different in shape or size may be used.
   However, only interchangeable parts will be supplied as service replacement parts.

5. Test point information
   ○ : Test point with no test pin.

Schematic Diagram Notes

1. Indication for Zener Voltage of Zener Diodes
   The Zener Voltage of Zener Diodes are indicated as such on Schematic Diagrams.

   Example:
   (6.2V).....Zener Voltage

2. How to identify Connectors
   Each connector is labeled with a Connector No. and Pin No. Indicating what it is connected to,
   in other words, its counter part.
   Use the interconnection schematic diagram to find the connection between associated connectors.

   Example:
   The connections between C.B.A.s are shown below.

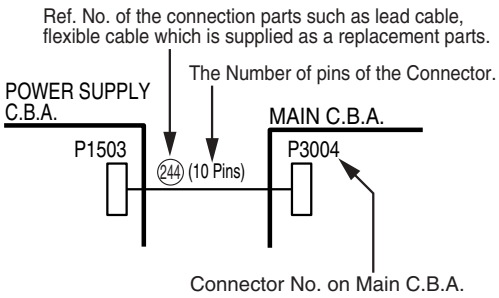

3. Parts marked "PT" are not used in any models included in this service model.

   Example: C6011 100P PT | C6014 PT | R6097 PT

4. The part number shown on this drawing is only main part number, except for safety parts. Be sure to make your orders of replacement parts according to the parts list.

5. Jumper wires are used for WA10, WA5 etc and these are not supplied as replacement parts.

Signal Waveform Note

How to read Signal Waveform

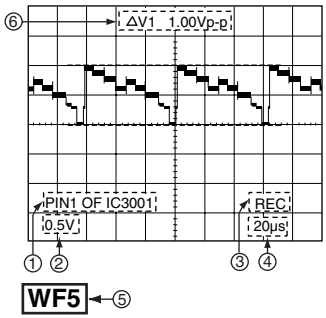

① Connecting Point
② Volts/Div
③ Operation Mode of VCR
④ Time/Div
⑤ Waveform Point on Schematic
⑥ ΔV1:Peak to Peak

Circuit Board Layout Note

Circuit Board Layout shows components installed for various models.
For proper parts content for the model you are servicing, please refer to the schematic diagram and parts list.

NOTE:
Circuit Board Layout includes components which are not used.

Model No. Identification Mark

COMPARISON CHART OF MODELS & MARKS

MODEL	MARK
PV-L452	A
PV-L652	B
Not Used	PT

Note : Refer to item 3 of Schematic Diagram Notes for mark "PT".

MAIN I (CONNECTOR) SCHEMATIC DIAGRAM

NOTE: For placing a purchase order of the parts, be sure to use the part number listed in the parts list. Do not use the part number on this diagram.

NOTE: FOR SCHEMATIC DIAGRAM AND CIRCUIT BOARD LAYOUT NOTES, REFER TO BEGINNING OF SCHEMATIC SECTION.

COMPARISON CHART OF MODELS & MARKS

MODEL	MARK
PV-L452	A
PV-L652	B
Not Used	PT

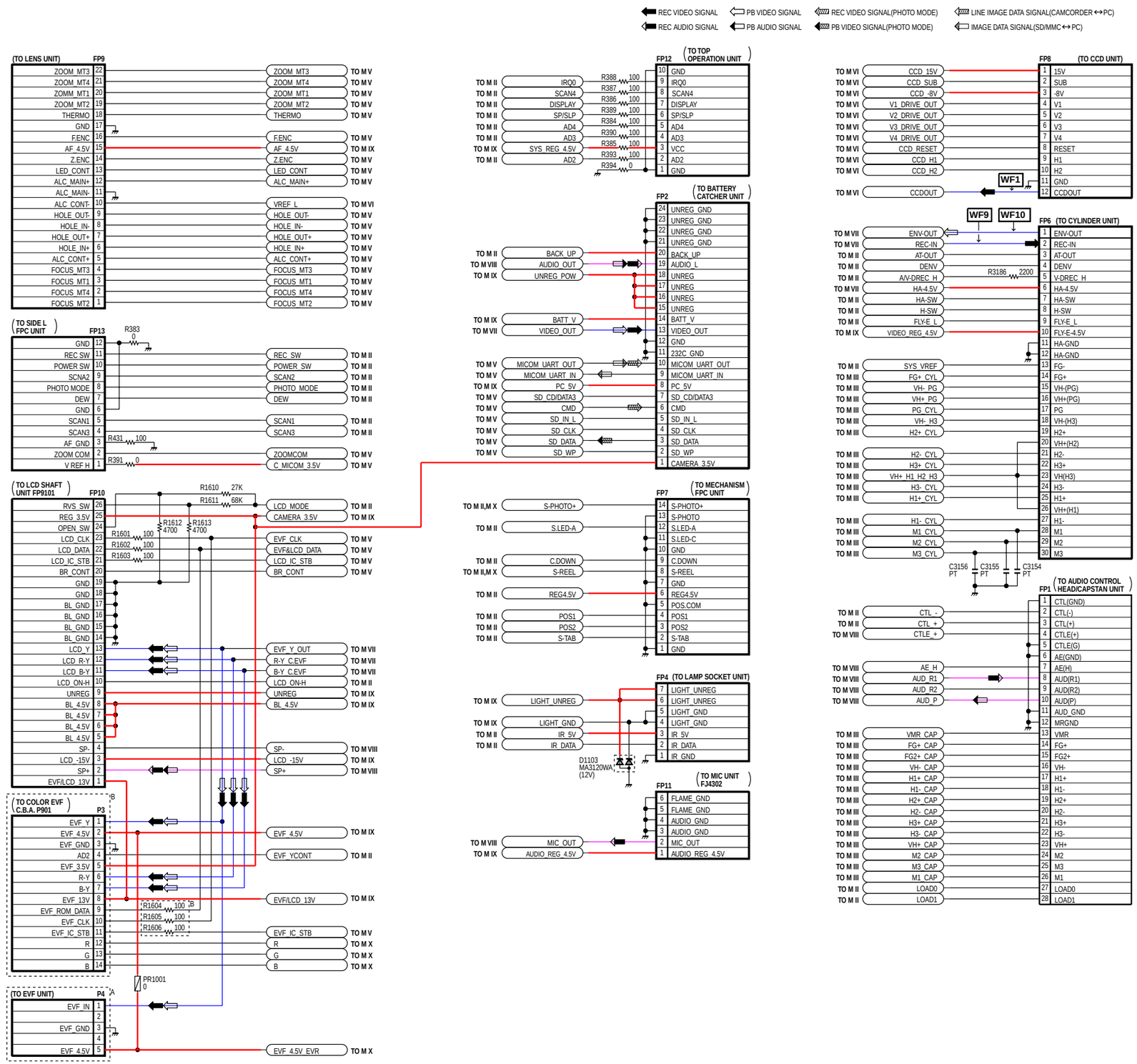

LINK TO SIGNAL WAVEFORM

LSJB8140

PV-L452, PV-L652

MAIN I (CONNECTOR) SCHEMATIC DIAGRAM

MAIN II (SYSTEM CONTROL/SERVO) SCHEMATIC DIAGRAM

***1** NOTE
TO DEFEAT THE SAFETY FUNCTION, CONNECT A DIODE BETWEEN TP6011 AND TP6012, OR SELECT THE H. SAFETY DEFEAT IN SERVICE MODE. REFER TO NOTE1 OF "EXTENSION CABLES FOR SERVICE" IN SERVICE NOTES SECTION FOR MORE INFORMATION.

***2** IC501 and IC6001 replacement note:
IC501 and IC6001 are supplied together only as a Microcontroller Kit (LSUC0005).
Microcontroller Kit consists of IC6001, IC501, and Instruction Sheet.
When replacing either IC6001 or IC501, be sure to replace both IC6001 and IC501.
When R6001 is found on the Main C.B.A., be sure to remove it at the same time.
Otherwise, normal operation may not be possible.

NOTE: For placing a purchase order of the parts, be sure to use the part number listed in the parts list. Do not use the part number on this diagram.

NOTE: FOR SCHEMATIC DIAGRAM AND CIRCUIT BOARD LAYOUT NOTES, REFER TO BEGINNING OF SCHEMATIC SECTION.

COMPARISON CHART OF MODELS & MARKS

MODEL	MARK
PV-L452	A
PV-L652	B
Not Used	PT

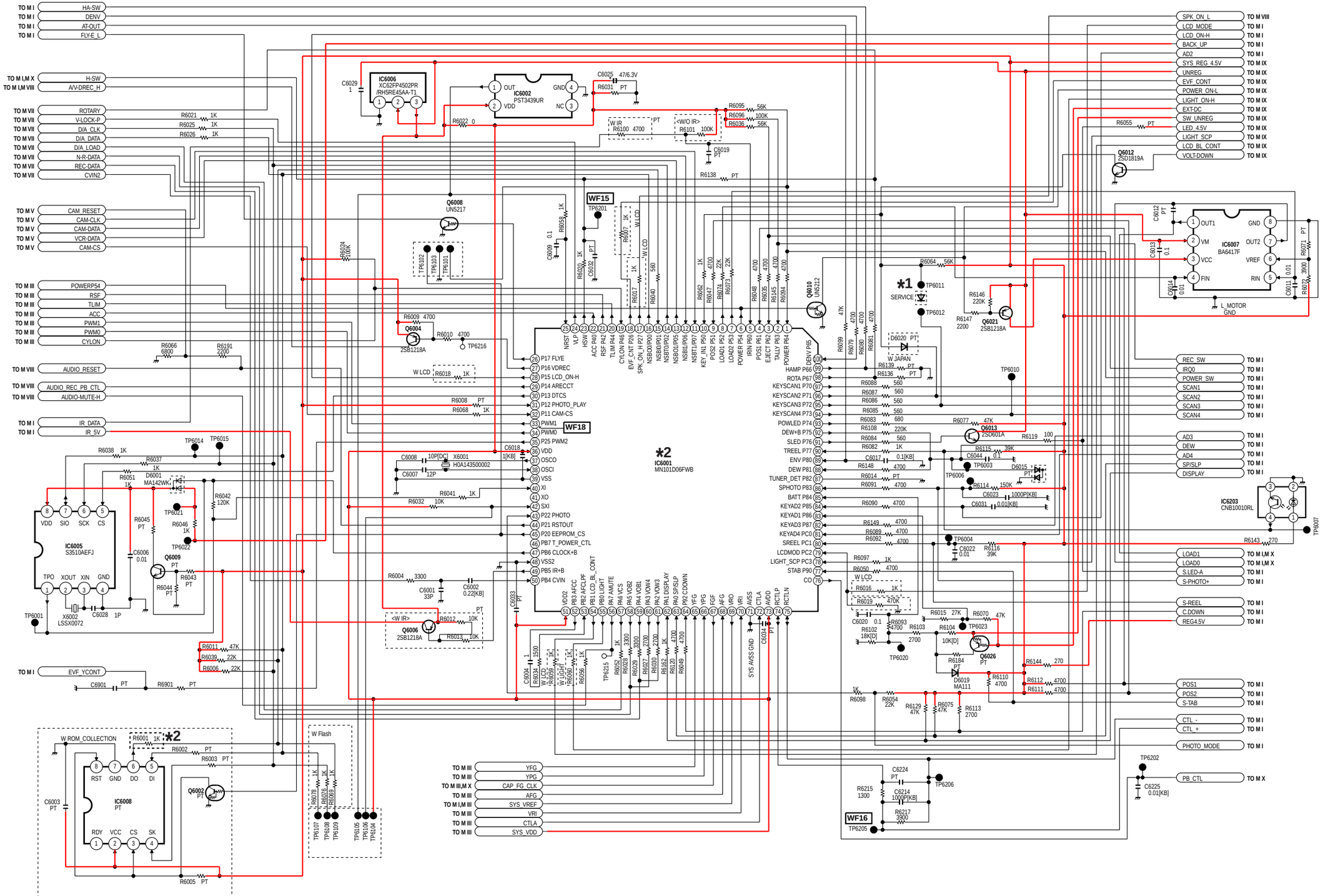

IC6001 KEY VOLTAGE CHART

(VCR MODE)

TERMINAL VOLTAGE	OPERATION BUTTON		
	KEY DATA 2 (PIN 84)	KEY DATA 3 (PIN 82)	KEY DATA 4 (PIN 81)
3.42~3.78V	STILL	---	---
2.52~2.88V	FF/ SEARCH	---	---
1.62~1.98V	REW/ SEARCH	---	MENU
0.72~1.08V	PLAY	---	DOWN
0~0.18V	STOP	---	UP

(CAMERA EIS MODE)

TERMINAL VOLTAGE	OPERATION BUTTON		
	KEY DATA 2 (PIN 84)	KEY DATA 3 (PIN 82)	KEY DATA 4 (PIN 81)
3.42~3.78V	STILL/ STROBE	---	---
2.52~2.88V	D.ZOOM	---	MANUAL FORCUS
1.62~1.98V	FADE	---	MENU
0.72~1.08V	---	LIGHT	DOWN
0~0.18V	EIS	B.LIGHT	UP

(CAMERA WIPE MODE)

TERMINAL VOLTAGE	OPERATION BUTTON		
	KEY DATA 2 (PIN 84)	KEY DATA 3 (PIN 82)	KEY DATA 4 (PIN 81)
3.42~3.78V	START	---	---
2.52~2.88V	SELECT+	---	MANUAL FORCUS
1.62~1.98V	SELECT-	---	MENU
0.72~1.08V	MODE	LIGHT	DOWN
0~0.18V	TO CAMERA EIS MODE	B.LIGHT	UP

(PHOTO REC MODE)

TERMINAL VOLTAGE	OPERATION BUTTON		
	KEY DATA 2 (PIN 84)	KEY DATA 3 (PIN 82)	KEY DATA 4 (PIN 81)
3.42~3.78V	---	---	---
2.52~2.88V	---	---	MANUAL FORCUS
1.62~1.98V	---	---	MENU
0.72~1.08V	TO PHOTO THUMBNAIL MODE	LIGHT	DOWN
0~0.18V	---	B.LIGHT	UP

(PHOTO THUMBNAIL MODE)

TERMINAL VOLTAGE	OPERATION BUTTON		
	KEY DATA 2 (PIN 84)	KEY DATA 3 (PIN 82)	KEY DATA 4 (PIN 81)
3.42~3.78V	---	---	---
2.52~2.88V	SELECT+	---	---
1.62~1.98V	SELECT-	---	---
0.72~1.08V	M.PLAY	LIGHT	---
0~0.18V	TO PHOTO REC MODE	B.LIGHT	---

(PHOTO PLAY MODE)

TERMINAL VOLTAGE	OPERATION BUTTON		
	KEY DATA 2 (PIN 84)	KEY DATA 3 (PIN 82)	KEY DATA 4 (PIN 81)
3.42~3.78V	---	---	---
2.52~2.88V	SELECT+	---	---
1.62~1.98V	SELECT-	---	MENU
0.72~1.08V	---	LIGHT	DOWN
0~0.18V	TO PHOTO THUMBNAIL MODE	---	UP

LINK TO SIGNAL WAVEFORM

LSJB8140

PV-L452, PV-L652

MAIN II (SYSTEM CONTROL/SERVO) SCHEMATIC DIAGRAM

MAIN III (CYLINDER/ CAPSTAN DRIVE) SCHEMATIC DIAGRAM

NOTE: For placing a purchase order of the parts, be sure to use the part number listed in the parts list. Do not use the part number on this diagram.

NOTE: FOR SCHEMATIC DIAGRAM AND CIRCUIT BOARD LAYOUT NOTES, REFER TO BEGINNING OF SCHEMATIC SECTION.

COMPARISON CHART OF MODELS & MARKS

MODEL	MARK
PV-L452	A
PV-L652	B
Not Used	PT

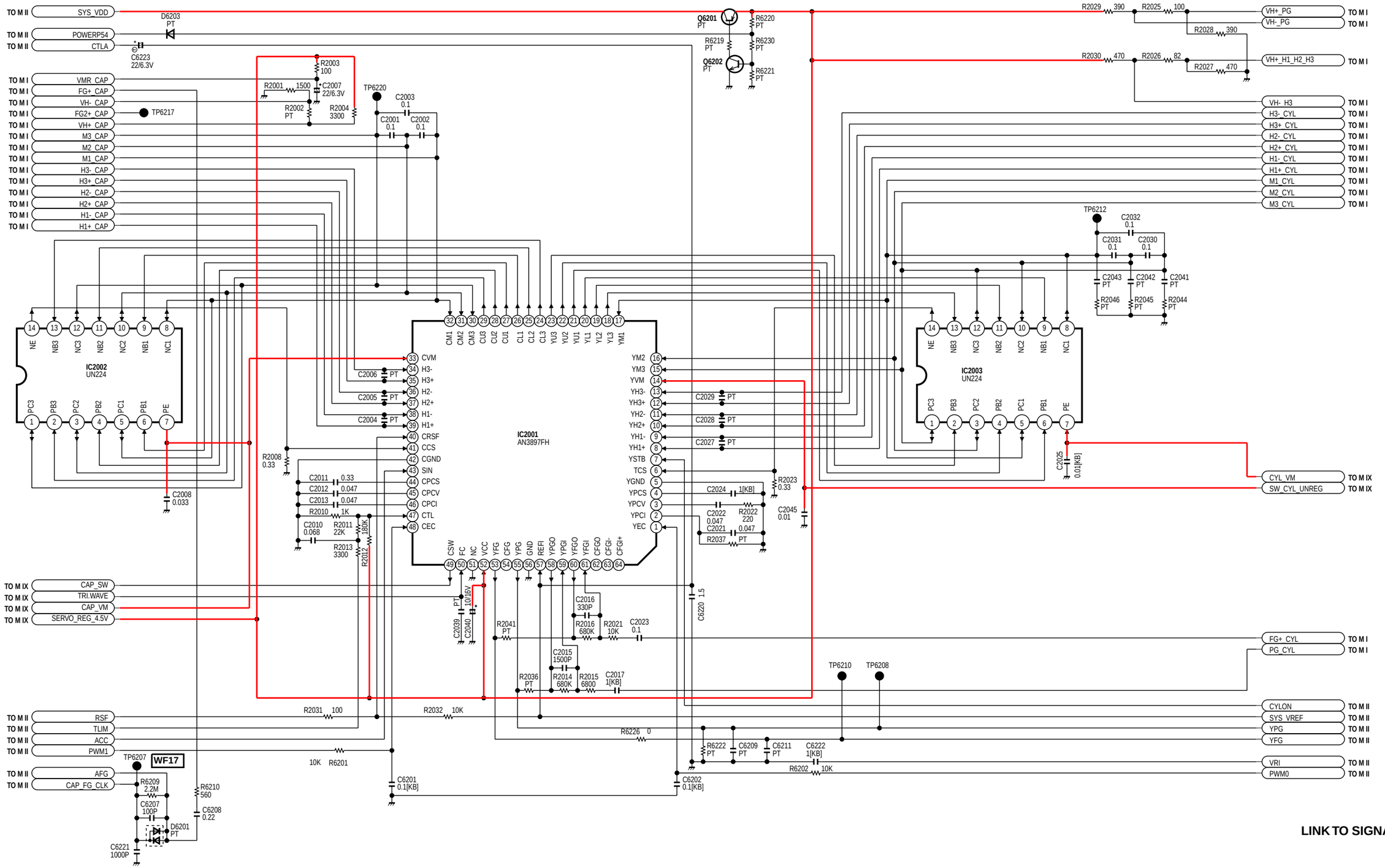

LINK TO SIGNAL WAVEFORM

LSJB8140

PV-L452, PV-L652

MAIN III (CYLINDER/CAPSTAN DRIVE) SCHEMATIC DIAGRAM

MAIN IV (CAMERA I) SCHEMATIC DIAGRAM

NOTE: For placing a purchase order of the parts,
be sure to use the part number listed in the parts list.
Do not use the part number on this diagram.

NOTE:
FOR SCHEMATIC DIAGRAM AND CIRCUIT BOARD LAYOUT NOTES,
REFER TO BEGINNING OF SCHEMATIC SECTION.

COMPARISON CHART OF MODELS & MARKS

MODEL	MARK
PV-L452	A
PV-L652	B
Not Used	PT

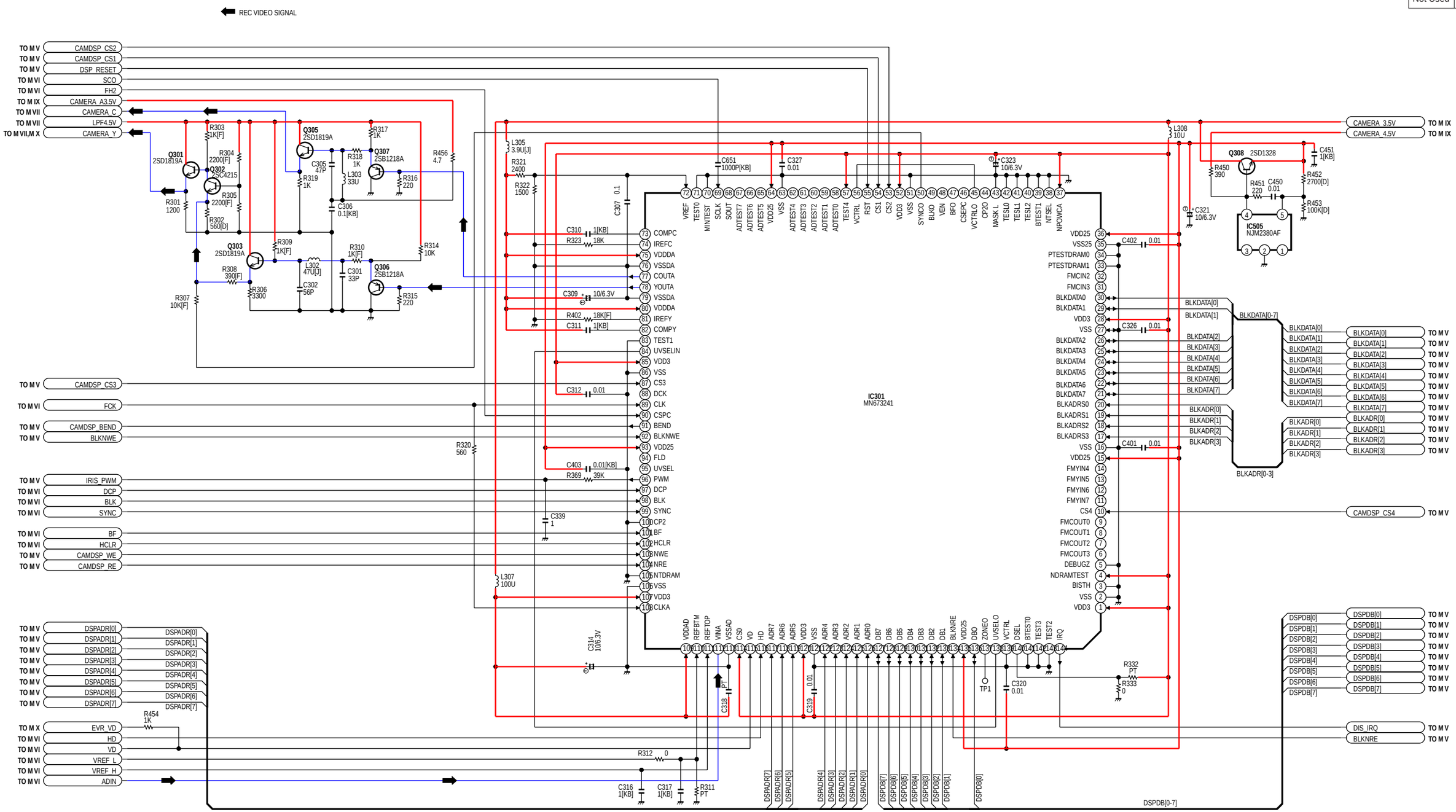

LINK TO SIGNAL WAVEFORM

LSJB8140

PV-L452, PV-L652

MAIN IV (CAMERA I) SCHEMATIC DIAGRAM

MAIN V (CAMERA II/LENS DRIVE) SCHEMATIC DIAGRAM

*2 IC501 and IC6001 replacement note:
IC501 and IC6001 are supplied together only as a Microcontroller Kit (LSUC0005).
Microcontroller Kit consists of IC6001, IC501, and Instruction Sheet.
When replacing either IC6001 or IC501, be sure to replace both IC6001 and IC501.
When R6001 is found on the Main C.B.A., be sure to remove it at the same time.
Otherwise, normal operation may not be possible.

NOTE: For placing a purchase order of the parts,
be sure to use the part number listed in the parts list.
Do not use the part number on this diagram.

NOTE:
FOR SCHEMATIC DIAGRAM AND CIRCUIT BOARD LAYOUT NOTES,
REFER TO BEGINNING OF SCHEMATIC SECTION.

COMPARISON CHART OF MODELS & MARKS

MODEL	MARK
PV-L452	A
PV-L652	B
Not Used	PT

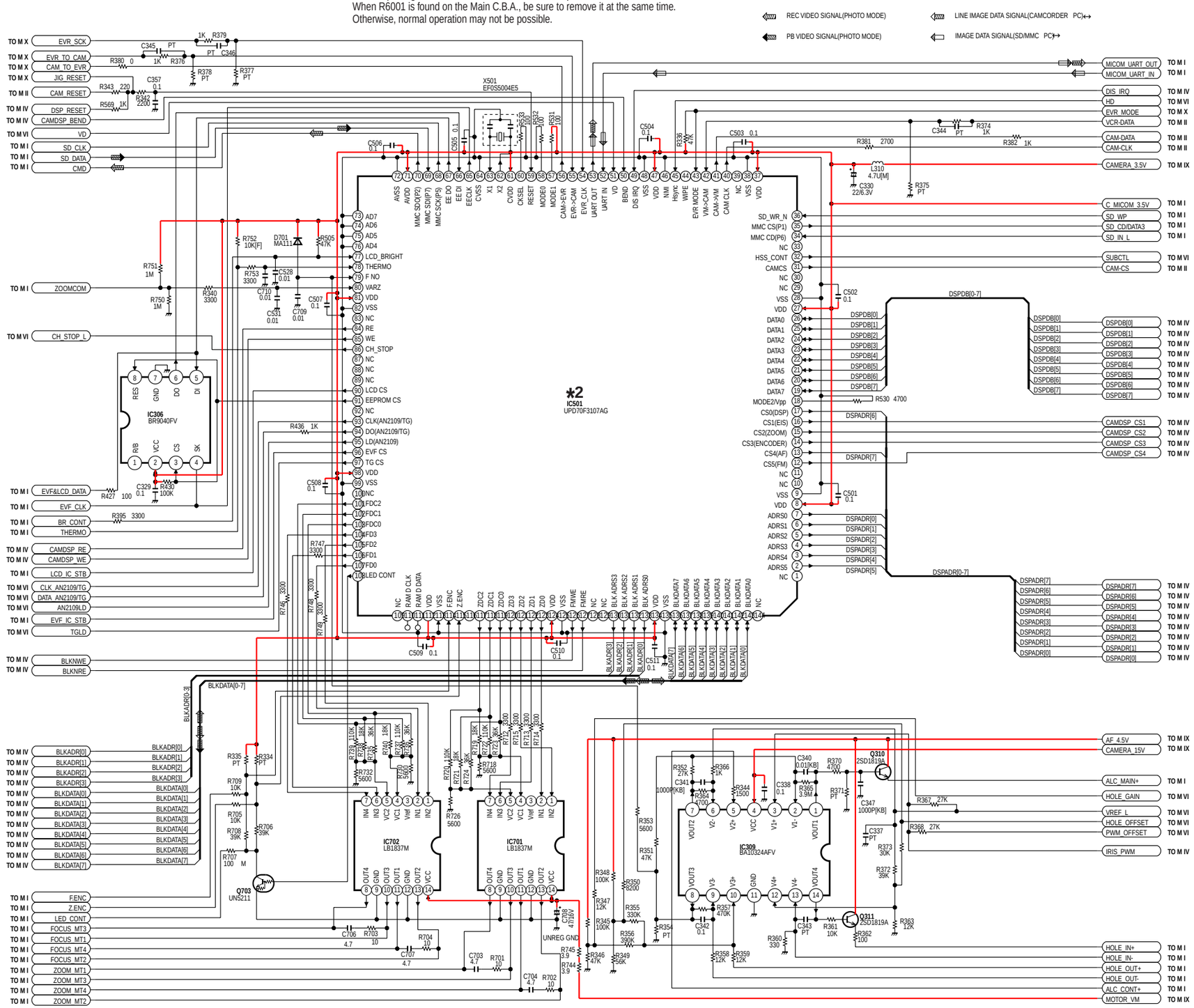

LINK TO SIGNAL WAVEFORM

LSJB8140

PV-L452, PV-L652

MAIN V (CAMERA II/LENS DRIVE) SCHEMATIC DIAGRAM

MAIN VI (CCD DRIVE) SCHEMATIC DIAGRAM

NOTE: For placing a purchase order of the parts, be sure to use the part number listed in the parts list. Do not use the part number on this diagram.

NOTE: FOR SCHEMATIC DIAGRAM AND CIRCUIT BOARD LAYOUT NOTES, REFER TO BEGINNING OF SCHEMATIC SECTION.

COMPARISON CHART OF MODELS & MARKS

MODEL	MARK
PV-L452	A
PV-L652	B
Not Used	PT

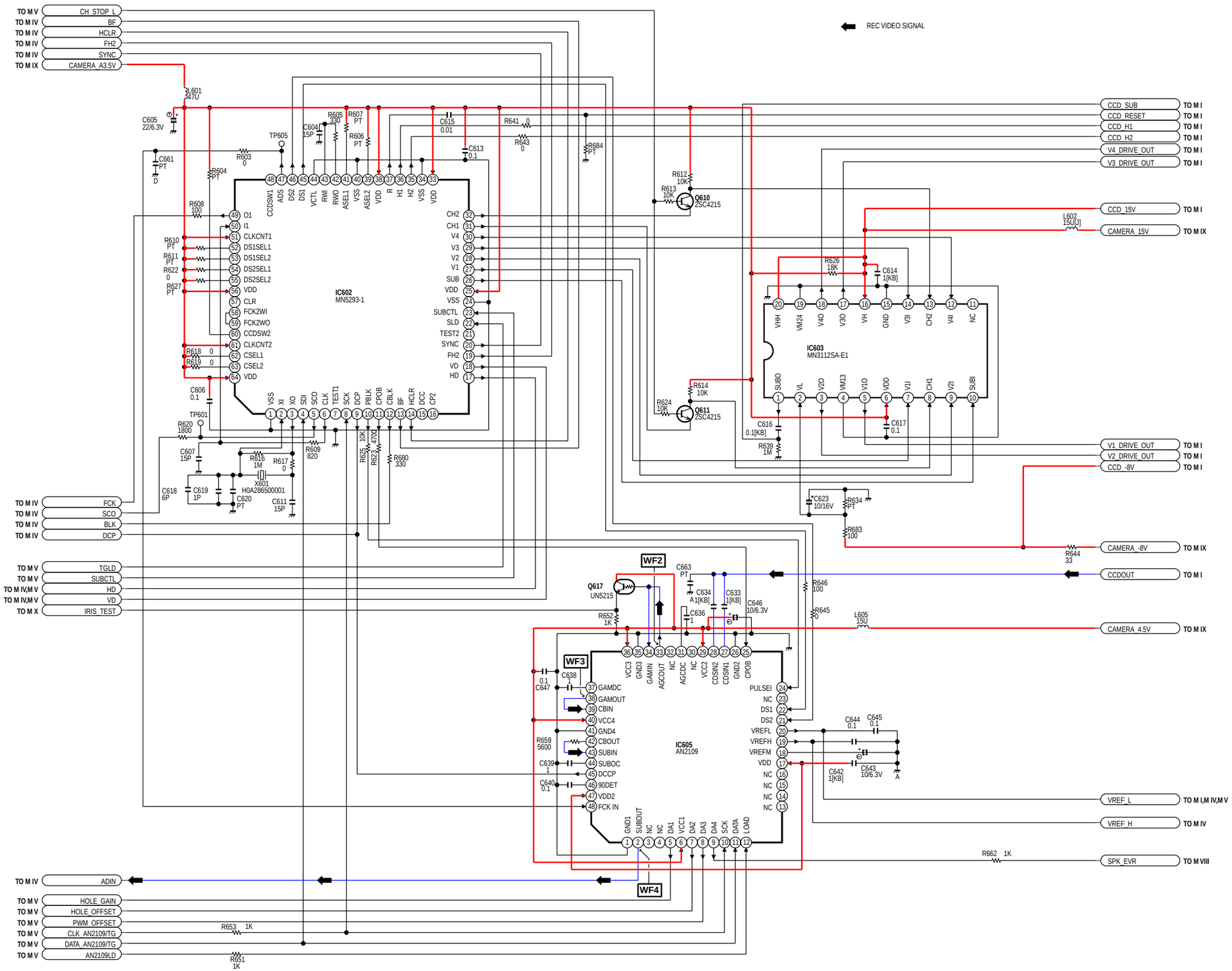

LINK TO SIGNAL WAVEFORM

LSJB8140

PV-L452, PV-L652

MAIN VI (CCD DRIVE) SCHEMATIC DIAGRAM

MAIN VII (VIDEO) SCHEMATIC DIAGRAM

NOTE: For placing a purchase order of the parts, be sure to use the part number listed in the parts list. Do not use the part number on this diagram.

NOTE: FOR SCHEMATIC DIAGRAM AND CIRCUIT BOARD LAYOUT NOTES, REFER TO BEGINNING OF SCHEMATIC SECTION.

COMPARISON CHART OF MODELS & MARKS

MODEL	MARK
PV-L452	A
PV-L652	B
Not Used	PT

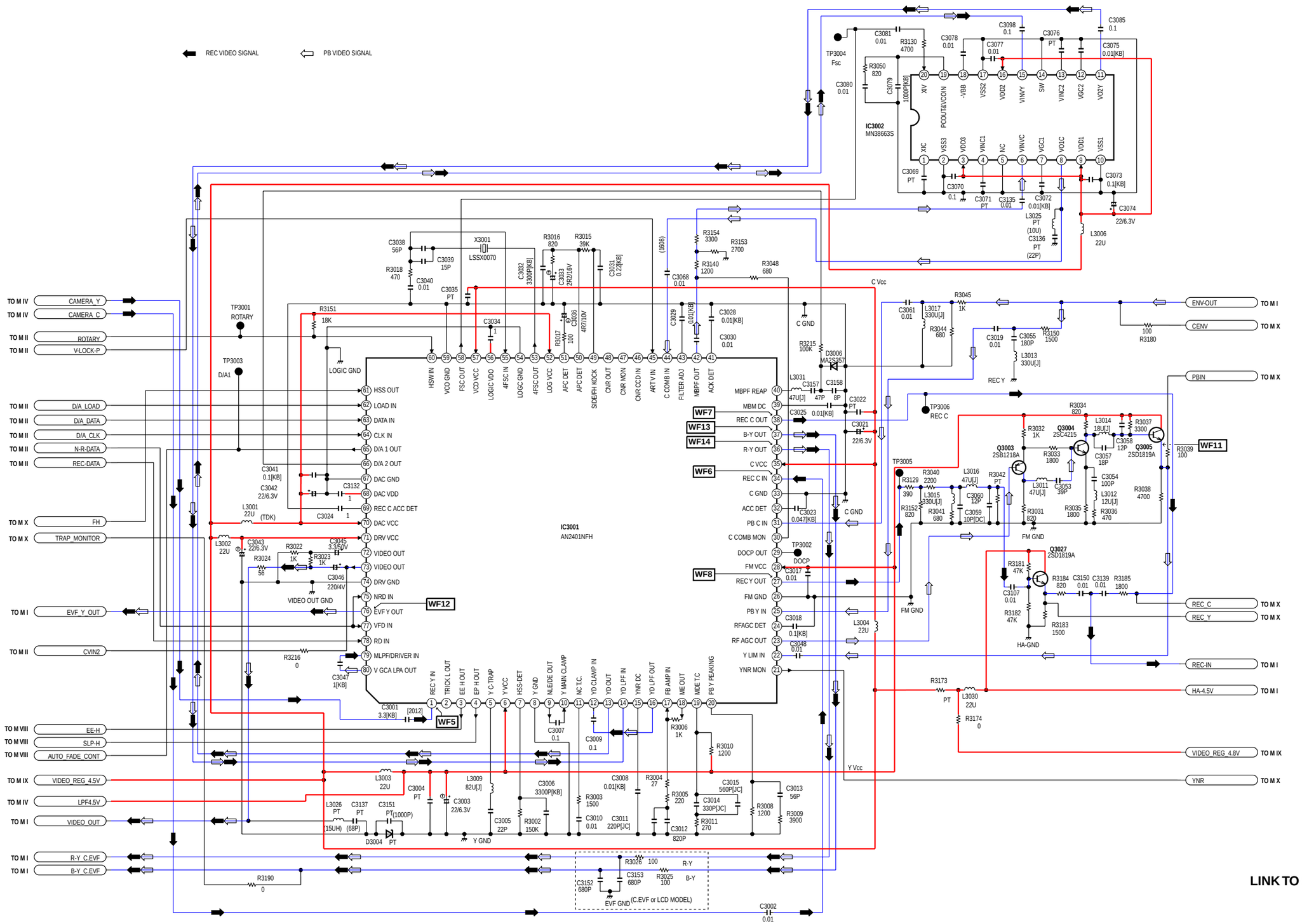

LINK TO SIGNAL WAVEFORM

LSJB8140

PV-L452, PV-L652

MAIN VII (VIDEO) SCHEMATIC DIAGRAM

MAIN VIII (AUDIO) SCHEMATIC DIAGRAM

NOTE: For placing a purchase order of the parts, be sure to use the part number listed in the parts list. Do not use the part number on this diagram.

NOTE: FOR SCHEMATIC DIAGRAM AND CIRCUIT BOARD LAYOUT NOTES, REFER TO BEGINNING OF SCHEMATIC SECTION.

COMPARISON CHART OF MODELS & MARKS

MODEL	MARK
PV-L452	A
PV-L652	B
Not Used	PT

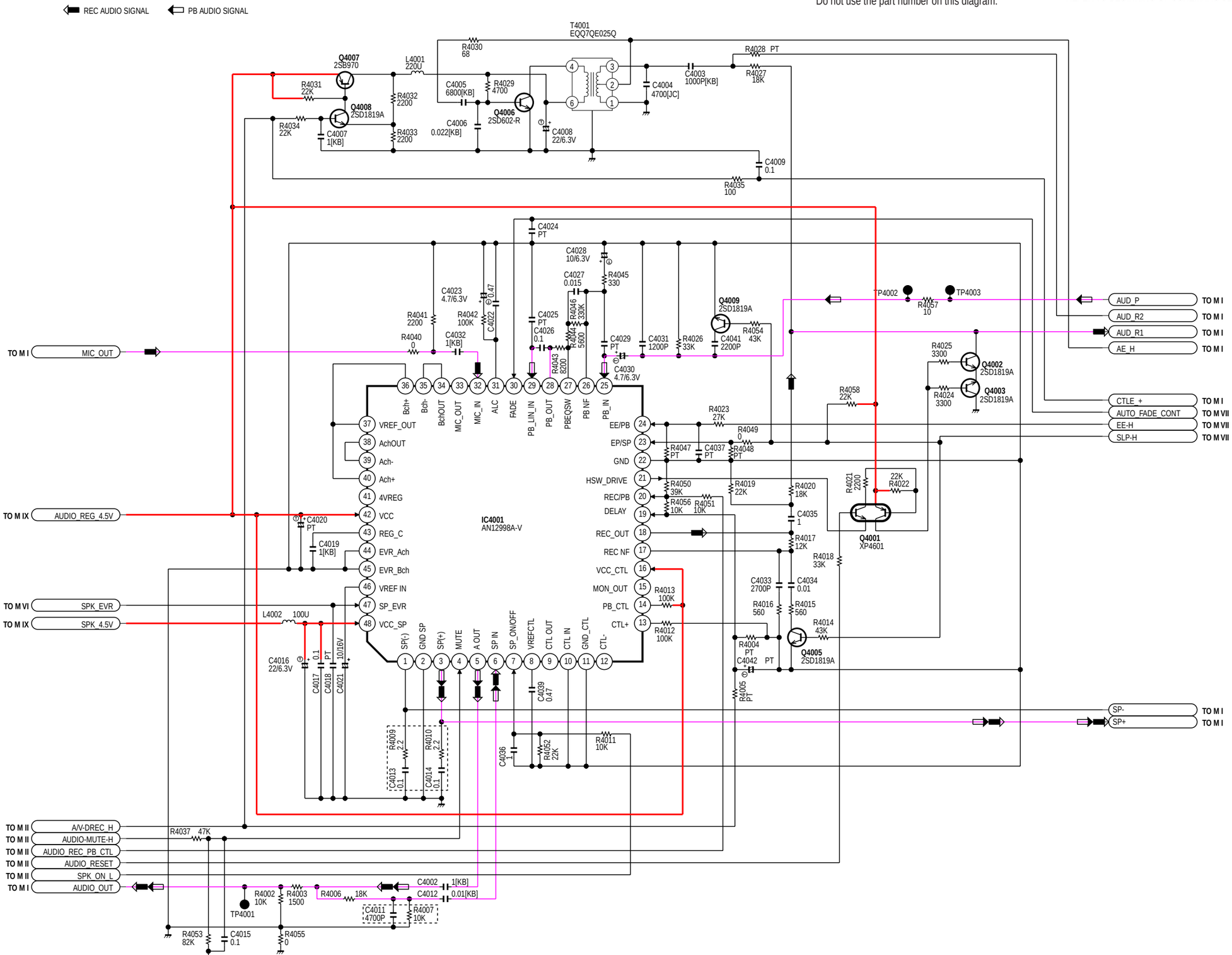

LINK TO SIGNAL WAVEFORM

LSJB8140
PV-L452, PV-L652
MAIN VIII (AUDIO) SCHEMATIC DIAGRAM

MAIN IX (POWER SUPPLY) SCHEMATIC DIAGRAM

CAUTION: FOR CONTINUED PROTECTION AGAINST FIRE HAZARD, REPLACE ONLY WITH THE SAME TYPE 1.5A 24/32V FUSE. ATTENTION: POUR UNE PROTECTION CONTINUE LES RISQUES D' INCENDIE N' UTILISERQUE DES FUSIBLE DE MÉME TYPE 1.5A 24/32V

CAUTION: FOR CONTINUED PROTECTION AGAINST FIRE HAZARD, REPLACE ONLY WITH THE SAME TYPE 2A 24/32V FUSE. ATTENTION: POUR UNE PROTECTION CONTINUE LES RISQUES D' INCENDIE N' UTILISERQUE DES FUSIBLE DE MÉME TYPE 2A 24/32V

NOTE: For placing a purchase order of the parts, be sure to use the part number listed in the parts list. Do not use the part number on this diagram.

IMPORTANT SAFETY NOTICE: COMPONENTS IDENTIFIED BY THE SIGN ⚠ HAVE SPECIAL CHARACTERISTICS IMPORTANT FOR SAFETY. WHEN REPLACING ANY OF THESE COMPONENTS, USE ONLY THE SPECIFIED PARTS.

NOTE: FOR SCHEMATIC DIAGRAM AND CIRCUIT BOARD LAYOUT NOTES, REFER TO BEGINNING OF SCHEMATIC SECTION.

COMPARISON CHART OF MODELS & MARKS

MODEL	MARK
PV-L452	A
PV-L652	B
Not Used	PT

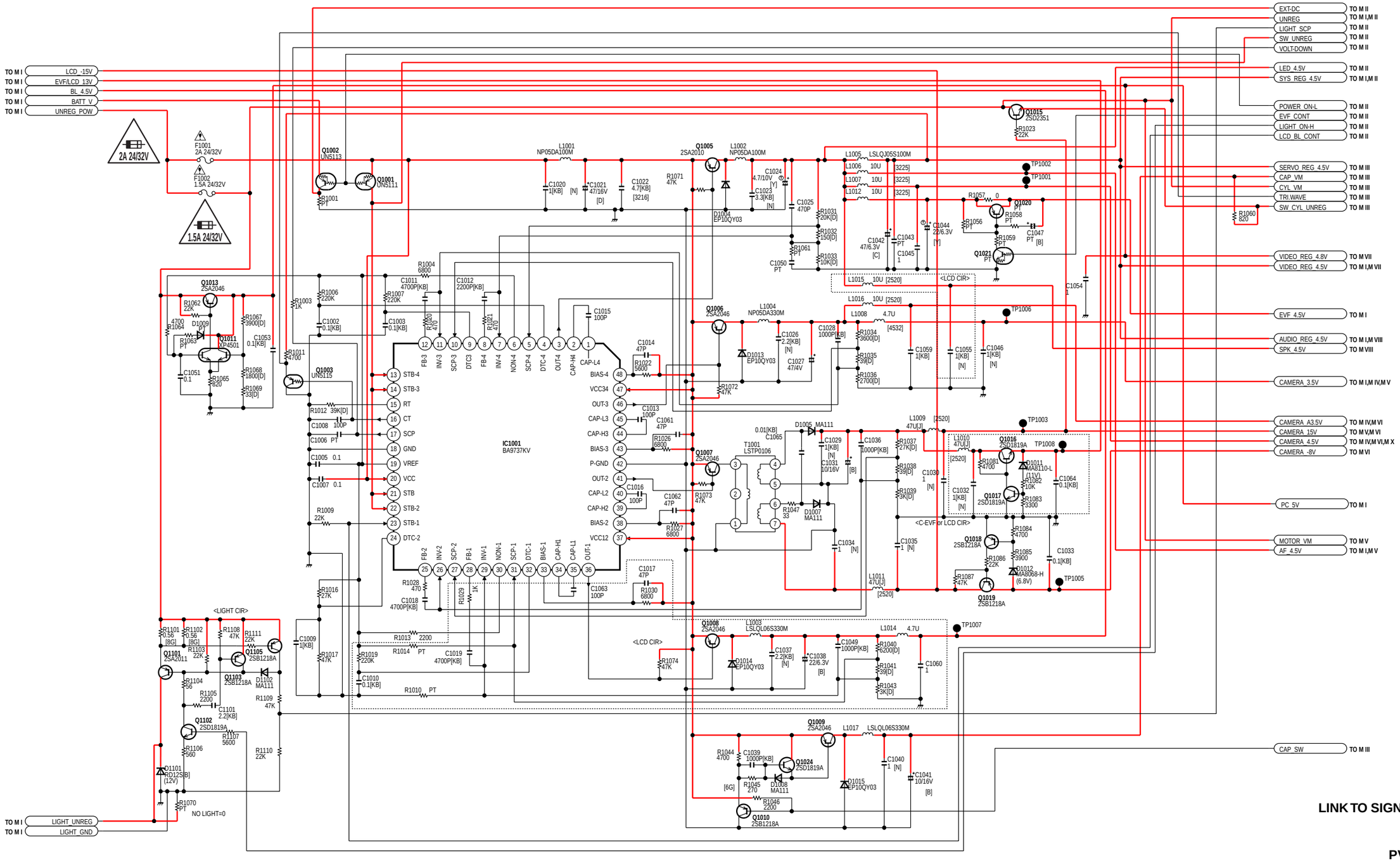

LINK TO SIGNAL WAVEFORM

LSJB8140

PV-L452, PV-L652

MAIN IX (POWER SUPPLY) SCHEMATIC DIAGRAM

MAIN X (EVR CONNECTOR) SCHEMATIC DIAGRAM

NOTE: For placing a purchase order of the parts,
be sure to use the part number listed in the parts list.
Do not use the part number on this diagram.

NOTE:
FOR SCHEMATIC DIAGRAM AND CIRCUIT BOARD LAYOUT NOTES,
REFER TO BEGINNING OF SCHEMATIC SECTION.

COMPARISON CHART OF MODELS & MARKS

MODEL	MARK
PV-L452	A
PV-L652	B
Not Used	PT

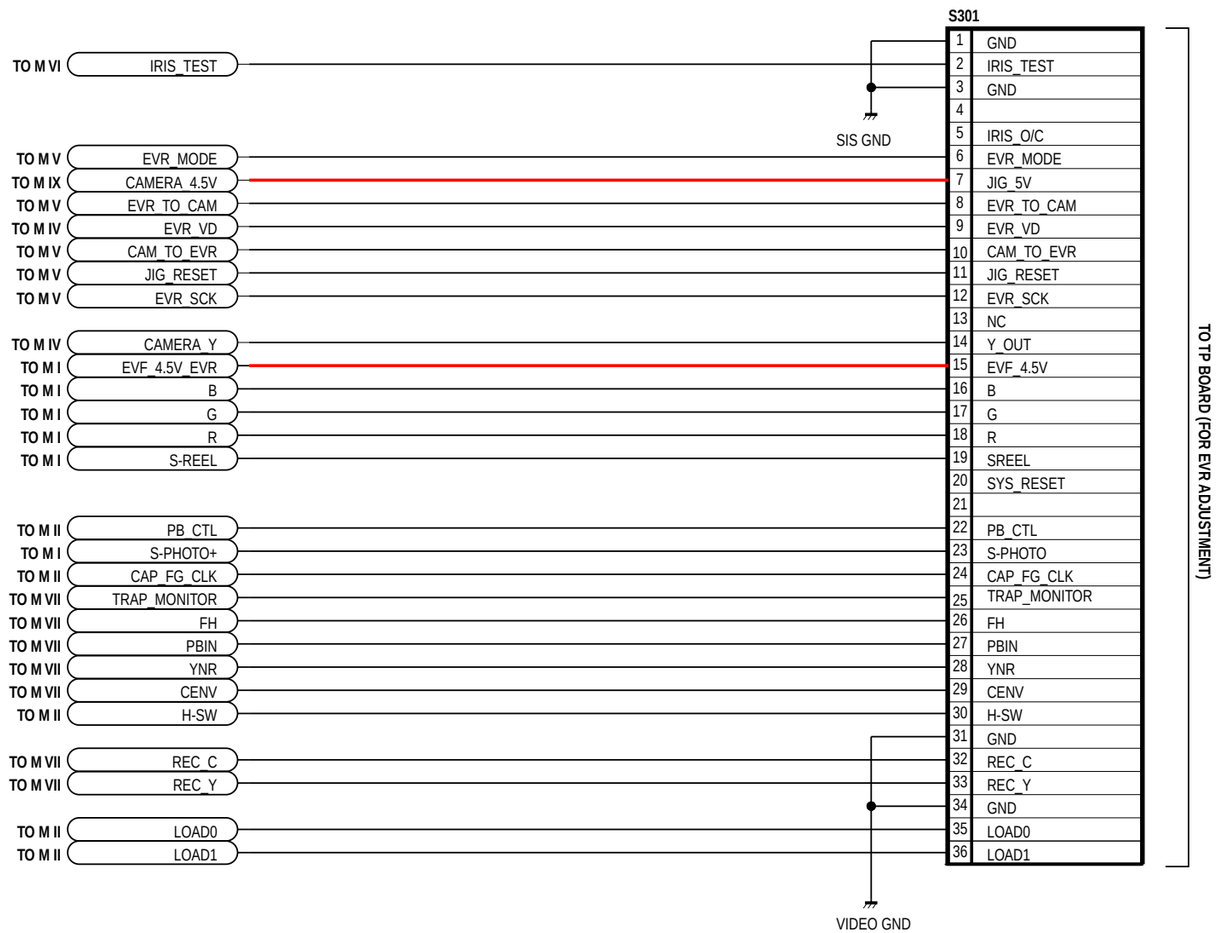

LCD I (LCD POWER) SCHEMATIC DIAGRAM

NOTE: For placing a purchase order of the parts, be sure to use the part number listed in the parts list. Do not use the part number on this diagram.

NOTE: FOR SCHEMATIC DIAGRAM AND CIRCUIT BOARD LAYOUT NOTES, REFER TO BEGINNING OF SCHEMATIC SECTION.

COMPARISON CHART OF MODELS & MARKS

MODEL	MARK
PV-L452	A
PV-L652	B
Not Used	PT

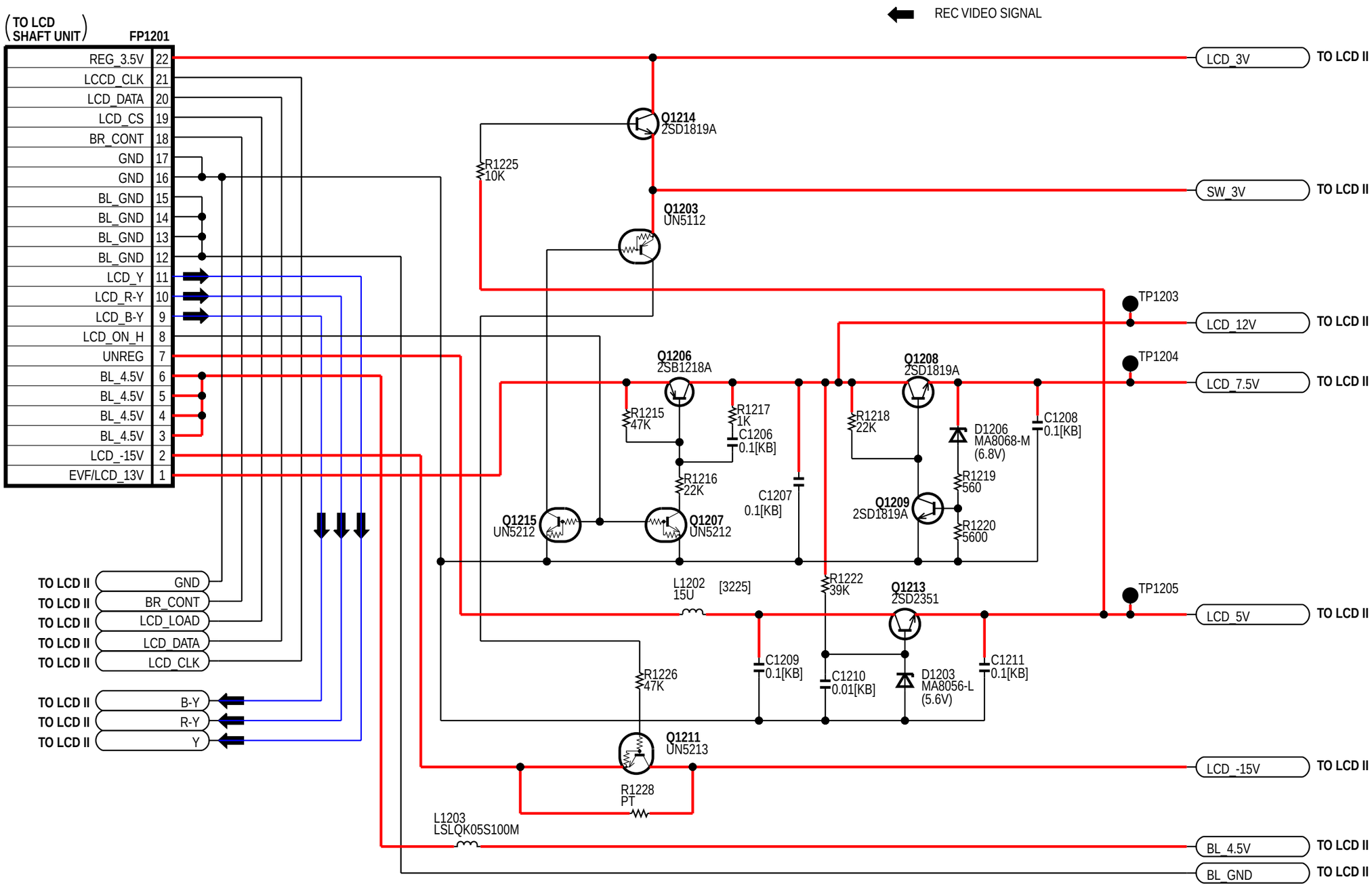

LSJB8143
PV-L452, PV-L652
LCD I (LCD POWER) SCHEMATIC DIAGRAM

LCD II (LCD DRIVE) SCHEMATIC DIAGRAM

IMPORTANT SAFETY NOTICE:
COMPONENTS IDENTIFIED BY THE SIGN ⚠ HAVE SPECIAL CHARACTERISTICS IMPORTANT FOR SAFETY. WHEN REPLACING ANY OF THESE COMPONENTS, USE ONLY THE SPECIFIED PARTS.

NOTE: For placing a purchase order of the parts, be sure to use the part number listed in the parts list. Do not use the part number on this diagram.

NOTE:
FOR SCHEMATIC DIAGRAM AND CIRCUIT BOARD LAYOUT NOTES, REFER TO BEGINNING OF SCHEMATIC SECTION.

COMPARISON CHART OF MODELS & MARKS

MODEL	MARK
PV-L452	A
PV-L652	B
Not Used	PT

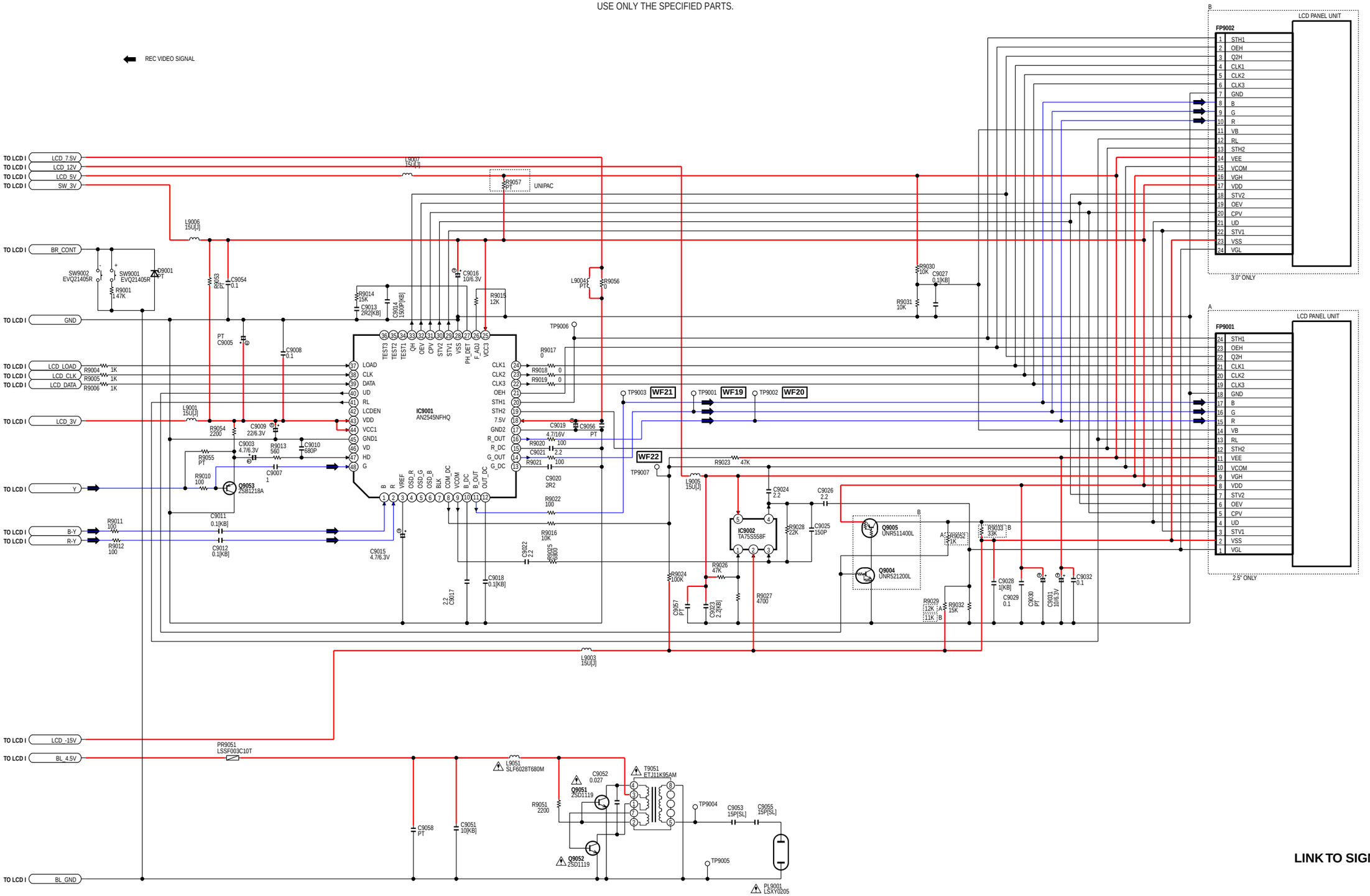

LINK TO SIGNAL WAVEFORM

LSJB8143
PV-L452, PV-L652
LCD II (LCD DRIVE) SCHEMATIC DIAGRAM